SAFER CHILD RESTRAINTS FOR CHILDREN 6 to 10 Years

Michael GRIFFITHS
Road Safety Solutions, Australia
Julie BROWN
Prince of Wales Medical Research Institute, Australia
Paul Kelly
Road Safety Solutions, Australia
Paper Number 09-0355

ABSTRACT

Other studies have identified, and recent studies in Australia and the U.S. have confirmed, that whilst the 1970's concept of boosters to try to improve adult seatbelt geometry for growing children is a good one, many of the currently available boosters do not provide children with optimal restraint.

This paper recommends a new category of CRS booster with the intention of providing more effective restraint to children in the 6 to 10 age group.

Recommended features include:-

- a mandatory requirement for side wings with performance based requirements.
- lap belt guides
- sash belt guides
- top tether strap
- anti-submarining features
- that the base of the booster seat be narrower so that three of these child restraints can fit across the rear seat of a typical mid size car's rear bench seat and allow for arm rests from car doors
- the seat incorporate 'ride height' lines.

Furthermore, this category of booster should have more demanding assessment procedures to ensure booster seats coming onto the market actually achieve improved protection for the children using them.

What this paper offers that is new is a safer class of booster to take older children through till they safely fit an adult seatbelt.

This paper explains the need for each component and shows the suggested dimensions of an exemplar restraint.

INTRODUCTION

There have been a number of recent studies demonstrating the typical three point (lap/sash) seatbelt restraints in the rear seats of cars are not an optimal restraint system for children until they are approximately 11 or 12 years of age [1-3].

Depending on the country, infants are generally restrained in rearward facing restraints up to six months or several years of age. Children then typically move from the rearward facing infant restraint into a forward facing child seat with an inbuilt five or six point harness. These restraints are attached directly to the car, and then the child is attached to the restraint through the five or six point harness.

These first two categories of restraint have been proven to be highly effective when used correctly [4-6].

Top tether anchorage points and later anchor fittings were compulsorily introduced into new vehicles in Australia over a number of years, starting with sedans in July 1976, and station wagons and hatchback vehicles in January 1977. It consequently became mandatory practice to secure child restraints using both the lap part of the adult seatbelt and a top tether strap in the rear seat. Most authorities in Australia advise that children should stay in these forward facing child seats with in-built harnesses until they physically will no longer fit, i.e. shoulders too wide. Depending on the child's rate of growth (and these days, obesity) children typically outgrow these restraints between the age of 4 and 6 years.

Once they outgrow these restraints, they mostly become reliant upon restraint from an adult seatbelt. The problem with this is that the geometry of adult seatbelts is generally not suited to children. This can be potentially rectified, by adjusting the path of the seatbelt webbing to try and better transfer the loads onto the strong bony structures of the child. This is generally done with what is called a booster seat. Booster seats raise the child up with the intention of making the webbing of the lap parts of the seatbelt more vertical so that they apply a higher downward force

on the child's thighs. This makes the seatbelt less likely to ride up into the abdomen. Boosters also raise the child higher so that the sash part of the seatbelt is more likely to be take a pathway over their shoulder, rather than across their face or neck.

Children seated on seat cushions with a length greater than their femur, tend to take a slouched position increasing the likelihood of the lap part of the seatbelt riding up the abdomen [1]

For these reasons the use of a booster seat is recommended and sometimes regulated for children once they outgrow forward facing child restraints. However, booster seats and booster cushions design mass limits (in regulatory standards) effectively (based on mass alone) limit booster seat use to children up to approximately age 8. Currently the upper most mass limit for boosters is in the vicinity of 36 kg. Based on anthropometric data [7] this would mean that 11% of 8 year olds, 22% of 9 year olds, and more than half of children over age 10 would be above the design mass limit (personal communication Michael Paine). In many instances the upper most design limit is 26kg, and this equates approximately to the 50th percentile 8 year old [7]. Furthermore in a recent study that looked at seat back height and seat width in boosters, the authors reported that some boosters would not accommodate children between 6 and 8 years [3]. Therefore, for many children over the ages of 6- 8 years, the lap sash belt is the only available restraint.

Booster seats vary considerably in what they offer and the effectiveness of their design. Some booster seats have no back which means the child (especially a sleeping one) is not given any lateral support. Moreover, recent studies have demonstrated that many booster seats currently on the market do not achieve the objective of improving belt fit for the child occupants who would be using them [8-9].

There is therefore a need for a new class of child restraint that caters for children from approximately the age of 6 to 10, and ensures a better match between seat belt geometry and these child occupants.

WHAT IS NEEDED

Based on the deficiencies observed in the current generation of boosters the desirable qualities of a new class of child restraint primarily designed to suit children in the 6 to 10 year age range include qualities of:-

- low strength lateral support to keep a sleeping child in position so that in the event of a crash, they are correctly positioned
- stronger lateral support (e.g. wings) of a sufficient height to provide crash energy absorbing padding protection for the child's head in a side impact
- raised base of the restraint to make the angle of the seatbelt lap webbing more vertical, so that it applies a higher downward load to the thighs, and has less opportunity or likelihood of slipping up over the relatively unformed front pelvis structure of the child into the abdomen
- a narrower base, that is, not much wider than a child's buttocks, to assist in more downward vertical application of force over the child's thighs, and less likelihood of the seatbelt slipping rearward into a submarine position
- a belt guide at the shoulder level to position the seatbelt so it passes over the child's shoulder and departs the child's shoulder in an approximately horizontal angle. This can provide some lateral stability to the child and ensures the sash belt does not pass over the child's neck or face
- anti-submarining features. That is design features to prevent the webbing of the lap part of the seatbelt sliding over the child's pelvis into its abdomen.

One of the difficulties with booster seats is that because they further raise the child above the seat base, the seat bite and hence seatbelt buckles are more difficult to reach. There is a need to provide better access to the seatbelt buckle below the booster's base, so that adults can easily find the buckle part of the seatbelt and fasten it to the sliding latch plate. This is assisted by having a narrow base on the booster, which in turn provides an opening for the adults hand to reach down to the seat bite.

SIDE WINGS

In lateral impacts, then, the two primary safety goals of a child restraint system are to:-

- retain the child's head within the child restraint
- provide energy absorption for better head protection in the side wings of the child restraint.

Head retention within the restraint requires three things. Firstly there must be a barrier or side wing to contain the head. Secondly by good top and base tethering of the child restraint, rotation of the child restraint towards the side door or oncoming object

can be prevented or minimised, and thirdly the motion of the torso should also be controlled to prevent undesirable motion towards the impact and in rebound. Energy absorption within the side wings or lateral structure of the restraint is desirable if there is direct impact between the child restraint and the adjacent vehicle door or incoming object.

In Australia, thanks to enhanced regulatory protocols that assess the likelihood of a head strike with a static door in 90 degree impacts, and consumer testing (CREP) at 90 or 66 degrees, the head retention capacity of many restraints including high back boosters has improved. However, in current model booster seats we still see many high back booster seats that do not provide adequate torso control in side impact, particularly in rebound. More importantly in many restraints the side wing height is insufficient for children at the upper limits of the mass limit.

LAP BELT GUIDES

Whilst many jurisdictions' have mandatory requirements for good front seat belt geometry, many jurisdictions do not have the same demanding requirements for rear seat belt geometry.

As a result of this, it is not uncommon to encounter poor rear seat belt lap geometry in popular cars. This can include very shallow angles of the lap part of the adult seatbelt that makes it easier for the seatbelt to slip up over the pelvis of a wearer into the abdomen. Sometimes there is also poor lateral spacing of the lower ends of the lap parts of the seatbelt.

Because a booster raises the child's buttocks and pelvis above the seatbelt anchorages, it is possible to use lap belt guides which provide a more vertical downward angle of the lap parts of the seatbelt which can then better engage with the child's pelvis and reduce the likelihood of "submarining".

A narrower base on the booster can also assist more vertical downward application of loads from the lap webbing of the seat belt across the upper aspects of the child's thighs, again leading to significantly lower likelihood of "submarining".

SASH BELT GUIDES

Again, because rear seat geometry is less tightly regulated than front seat belt geometry, it is more common to experience poor sash belt geometry in the rear seats of vehicles.

This poor sash belt geometry can be even worse for shorter rear seat occupants with sashes taking angles that may slip off because they do not engage well with the shoulder, or the webbing may pass across the child's face or neck in a potentially hazardous manner.

Boosters can incorporate either structural or non-structural seatbelt webbing guides that reposition the sash belt in a more optimal location for the size of the intended occupant of the booster.

Non structural guides rely upon good positioning of the seatbelt early in the crash when loading commences, and then hope that the occupants shoulders and upper torso will "wrap" around the sash part of the seatbelt and keep the seatbelt in a good position on the child's shoulder.

Structural belt guides can make use of the structural rigidity of the back of the booster cushion achieved by the use of a tightly adjusted top tether strap. These structural sash belt guides are less dependent upon early loading for engagement from the occupant and "wrapping" of the child's shoulder and upper torso around the webbing, and, as such, provide more reliable and robust protection in multiple impacts or impacts where the directions of primary force or loading can vary during the impact.

TOP TETHER STRAPS

As stated earlier, mandatory provision of top tether anchorages in new passenger cars commenced in Australia in 1976. This was subsequently extended to include other passenger vehicle types, including coaches (long distance buses).

What this means is, as at the date of ESV 2009, Australia has had 33 years of experience of the performance of top tether straps with child restraint systems in the real world of crashes on public roads. This has been backed up by extensive research into the performance of top tethers in crash sled tests and some full scale barrier tests by NSW RTA Crashlab.

What has been learnt is that top tethers can provide:-

- good lateral stability of the portion of the child restraint containing the child's shoulders

- excellent limitation of forward displacement of the child's head.

ANTI SUBMARINING FEATURES

Anti-submarining features have the purpose of keeping the lap belt positioned over the child's thighs during crashes and preventing the seatbelt slipping up over the child's pelvis into their abdomen

A dramatic demonstration of the need for and the benefits of anti-submarining features (that is, the function often performed by crotch straps or anti-submarining clips) was experienced in Australia in the late 1970's.

A new style of forward facing child seat was introduced into the market with a four point harness not incorporating any crotch strap. Within a short time there was an unfortunately significant number of child fatalities recorded, not just in crashes, but also in stationary mode. The child could slide down under the harness to the extent that the cause of death was blockage of an airway and suffocation.

The lack of collation of a national data system meant that in the order of more than 9 deaths were recorded before action was taken.

The first recorded death in New South Wales was investigated jointly by the then New South Wales Traffic Accident Research Unit and Standards Australia. An immediate recall and addition of a crotch strap appeared to entirely eliminate the problem. There were no more reports of deaths associated with this (previously) crotch strap less four-point harness.

It was not until some years after that, that Australian researchers came to a good understanding of the submarining phenomenon and what kind of seatbelt geometry was required to reduce the likelihood of submarining.

Again, it has been the consumer program, CREP, which has led to better identification and understanding of the submarining phenomenon in different types of forward facing booster seats.

As is now well known in adults, the prospect of submarining can be, amongst other means, reduced by:-

- an anti-submarining pan which engages with the buttocks of the adult and, in conjunction with the downward pressure of the lap part of the seatbelt, provides forward restraint

- ensuring a more vertical angle of the lap part of the seatbelt, so that it applies pressure across the tops of the upper thighs of the adult.

What has been learnt in the consumer child restraint program, CREP, is that some booster seats appear to inadvertently have an anti-submarining base. That is, the bases of those booster seats are a blow moulded shell, with the horizontal seating surface of the shell sufficiently thin so that under the forces of a crash, the area under the buttocks deflects downward while the front lip maintains its height because of the front vertical panel. The combination of the central downward deflection and the undeformed front lip appears to form an impromptu anti submarining pan and provides some restraint on the front of the buttocks of the child occupant.

Whilst this attribute appears to be accident of manufacture and was initially viewed as poor design, the downward depression of the seat base was very effective in preventing submarining in the consumer program (CREP) sled tests.

This seemingly inadvertent, but effective feature had the significant benefit that it did not require the parent or carer to undertake the extra action of fastening a crotch strap (anti submarining clip).

If all parents and carers consistently used all components of a child restraint in complete accordance with the manufacturer's instructions then one of the most reliable methods of preventing a child's pelvis sliding forward would be to have a crotch strap that attaches to the lap part of the seatbelt, that is, an anti-submarining clip. However in the real world of poor behavioural compliance, an engineering feature which automatically does the task of preventing submarining is more likely to result in consistently safer restraint use and less submarining injuries to children.

REQUIREMENTS FOR THREE BOOSTERS PER REAR SEAT

An issue of considerable debate in Australia is that wider child restraints can mean that only two will fit across the rear seat of medium size passenger cars and many large family sedans. This means that a family with more than two children, or that wants to carry more than five occupants, needs to move into a vehicle with three rows of seating. (This is also a perceived problem with ISOFIX and LATCH). The most commonly chosen, and the cheapest style of vehicle with three rows of seating, is a four-wheel drive vehicle (4WD/SUV).

As a generalisation, 4WDs/SUVs are more prone to rollover, more prone to single vehicle run off road crashes, and are heavier and more aggressive vehicles in the road mix. When 4WDs roll, their roll rate is generally more violent **than a car** and

the likelihood of serious injury is greater. Overall then anything which pushes families into four wheel drives can lead to an overall degradation of the safety of not just them, but other road users.

Therefore, it is desirable to keep as many families as possible within standard family sedans.

One way to do this is to try and revise the design of child restraints so that three can be comfortably fitted in the rear seat of medium and large family sedans.

Two of the most significant problems in accommodating three child restraints in a vehicles rear seat are the arm rests which protrude from the lower rear corner of many car doors and the reduction in seat width between intruding wheel arches.

It would assist installation of child restraints if vehicle manufacturers reviewed the need for these adult armrests, made them retractable or, at least made them easy to detach.

Nevertheless, booster seats be made to fit above rear door arm rests, if the boosters have a narrower base, and the booster's lateral side wings do not commence until approximately 200mm or so above the seat base

The 200mm dimension was arrived at by inspecting the rear seat of a number of popular sedan cars. Some photographs of typical armrests are shown in adjacent Figures 1 and 2.

Figure 1 – Arm rest in Honda Civic mid/small sedan

Figure 2 – Arm rest in Australia's most popular family size station wagon

It is of limited use to provide energy absorbing side wings and lateral support, if the back and the sides of the child restraint are not held in position in impacts which have lateral components. The best way to provide this lateral stability is to have a top tether strap which firmly secures the top rear of the booster seat against the vehicle's seat back, that is, not just in a fore and aft direction, but also in a sideways/lateral direction.

One of the difficulties with booster seats is that because they raise the child further above the seat base, the seat bite where the seatbelt buckles are located are more difficult to reach. Better access for adults to these buckles below the booster's base can be provided if the boosters have a narrower base. The adult can then more easily locate the buckle part of the seatbelt and then fasten it to the sliding latch plate.

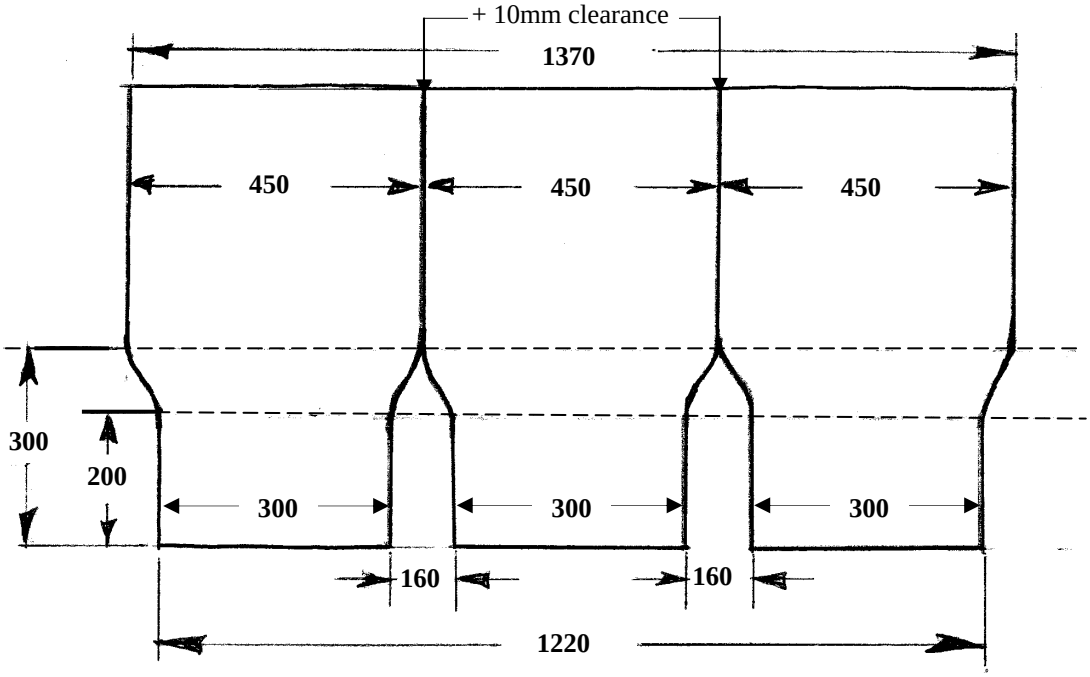

Figure 3 – Author's initial concept sketch depicting possible front elevation of three Type F seats. Shows the narrow base cut outs to allow for seatbelt buckle access and car door arm rests. Further development on these dimensions is underway.

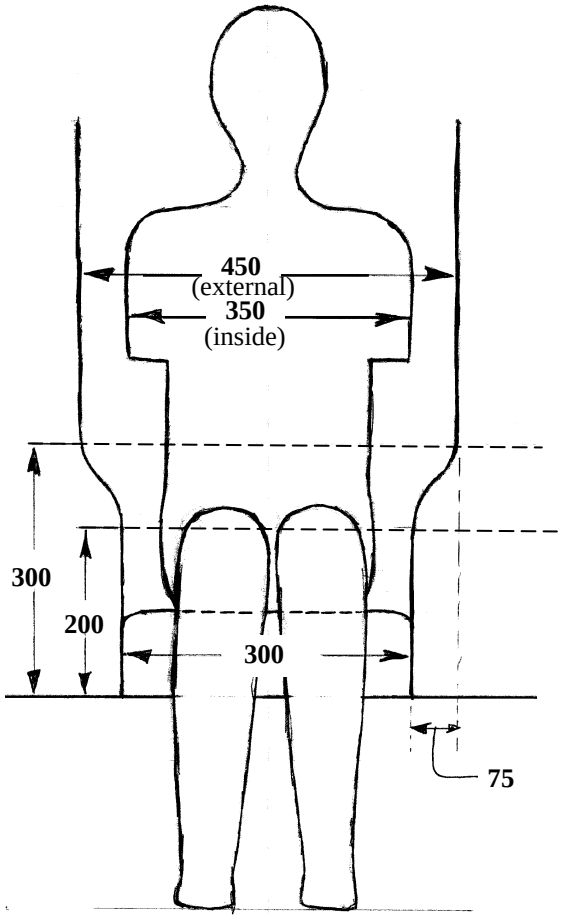

Figure 4 – Author's initial concept sketch of possible front elevation. Shows dimensions of seat base cut outs to allow for seatbelt buckle access and car door arm rests and wheel arches. Work is continuing on optimal dimensions of this new type of booster.

SAFE RIDE HEIGHT LINES

The concept of safe ride height lines is explained in greater detail in the authors' paper ESV 09-0354.

There is a considerable amount of research which has arrived at a degree of consensus as to at what dimensions a child can safely use an adult seatbelt, and at what dimensions a child should remain in a forward facing six point harness.

A similar volume of research has documented the greater exposure to risk of injury to children who prematurely graduate into boosters from forward facing child seats, and from boosters into adult seats.

The concept of 'safe ride height' lines as applied in booster seats consists of:-

- a lower line across the rear of the booster seat back and sides which indicates the minimum shoulder height for a child to safely ride in the booster. If the child's shoulders are below that line, then they should be in a forward facing six point harness child seat

- an upper line across the booster seat back and sides which indicates the shoulder height at which a child could safely use a seatbelt.

PATHWAY TO A STANDARD

Once all these desirable features had been identified, the next task was to see whether it was technically possible to satisfy all of these in a real product.

A number of requests had been made to Standards Australia by many organisations seeking better and safer restraint systems for children in the 5 to 10 year age bracket.

As a result of these requests, the task of designing a standard for this new category of restraint system was taken on to the work program of Standards Australia Child Restraint Systems committee.

Unlike many new Standards, this was not one where there was existing product and the task was to develop a Standard which discriminated between those which offer good protection and those which offer less than adequate protection.

In this instance the authors were not aware of any existing product which satisfied consumer or researcher expectations.
This meant that the design and performance specifications had to be developed in the absence of any current product.

Because of the strong motivation to be able to fit three of these child restraints in the rear seats of cars, there was inherently going to be some dimensional design restrictive requirements as part of the Standard.

CHOICE OF A TEST TOOL

In terms of evaluating the fit and crash test performance of a child restraint, the best kind of tool is an anthropomorphic, biofidelic test dummy.

To a degree, what was available in the way of dummies had a large influence on the ultimate design specifications for the upper end of this new category of booster. The most suitable, and the largest child test dummy, was the 50th percentile 10 year old Hybrid III

A review of anthropomorphic data revealed that a child restraint which fitted a 50th percentile 10 year old Hybrid III should also fit 95th percentile 8 year old children.

What this meant was that in terms of mandatory use, it was possible for Authorities to mandate use of this kind of booster for children up to the age of 8 years, in the knowledge that there would not be a need for widespread exemptions.

When there is a need for widespread exemptions, laws become unenforceable, because Police officers will not enforce laws where they are frequently overturned by the courts.

CONCLUDING REMARKS

In conclusion, there is a widely agreed need amongst researchers and carers for a new style of restraint system to provide more effective protection for children in the 6 to 10 years age group.

This paper summarised and discussed both the safety and usability issues that this new type of restraint system would need to both offer good protection to children, and be user friendly for parents and carers.

The Australian Standards Committee on Child Restraint Systems has the development of a Standard for this new type of booster on its current work program, and development of the new standard is reportedly well advanced.

It is hoped to be able to produce a prototype of this new class of restraint at the ESV 2009 Conference.

REFERENCES

1. Klinich, K.D., Pritz, H.B., Beebe, M.S., Welty, K.E. (1994) "Survey of older children in automotive restraints" SAE paper 942222 Stapp Car Crash Conference

2. Huang, S. and Reed, M.P. (2006) "Comparison of child body dimensions with rear seat geometry" SAE Transactions: Journal of Passenger Cars – Mechanical Systems, 115.

3. Bilston L and Sagar N,(2007) "Geometry of rear seats and child restraints compared to child anthropometry", Stapp Car Crash Journal 51:175-198

4. Henderson N, Brown J, Paine M, Griffiths M (1994) "Injuries to restrained children" 38th Annual Conference of the Association for the Advancement of Automotive Medicine, Lyon, France

5. Isaksson-Helman I, Jacobssen L, Norin H (1997) "Trends and effects of child restraint systems based on Volvo's Swedish accident database" Proceedings Child Occupant Protection 2nd Symposium, Orlando Florida pp43-54

6. Sherwood CP. Ferguson SA, Crandall JR (2003) "Factors leading to crash fatalities to children in child restraints" Association for the Advancement of Automotive Medicine 47:343-59

7. CDC Clinical Growth Charts 2000 [accessed 1st February]; Available from: http://www.cdc.gov/nchs/about/major/nhanes/growthcharts/clinical_charts.htm

8. Brown J, Kelly P, Suratno B, Paine M, Griffiths M (2009) "The need for enhanced protocols for assessing the dynamic performance of booster seats in frontal impacts" Traffic Injury Prevention 10:1,58 - 69

9. Reed MP, Ebert-Hamilton SM, Sherwood CP, Klinich KD, Manary MA (2008) "Evaluation of the static belt fit provided by belt-positioning booster seats" IIHS Report September 2008 pgs27 available at http://www.iihs.org/research/topics/pdf/r1104.pdf