# THE MINICARS RSV – STILL A CAR FOR THE FUTURE

**Donald Friedman**
Center for Injury Research
United States
Paper Number 09-0480

## ABSTRACT

Nearly a half century ago, the General Motors Research Laboratories, developed the high performance Electrovair, with an induction motor drive and solid state controller; the Lunar Rover, GM's Mark on the Moon; passive occupant protection; separation cruise control; optical lane following; and an electrochemical rechargeable Lithium Iodine engine.

In 1968, a new company called Minicars grew out of this earlier work. This group developed prototype electric, gas and hybrid electric powered versions of a small car for the U.S. government. In 1970, Minicars was a subcontractor to AMF for the development of its Experimental Safety Vehicle.

The Minicars' Research Safety Vehicle (RSV) was conceived in 1975 as a 1985 prototype. It was to be an S3E vehicle: Safe, Environmental, Efficient and Economical. It was built with foam filled, thin wall sheet metal sections and a polyurethane skin. This car passively protected occupants in 80 kph (50 mph) full frontal, 129 kph (80 mph) half car offset frontal, 64 kph (40 mph) angled side, rear and 48 kph (30 mph) rollover dynamic tests. An electronic version incorporated antilock brakes, radar separation cruise control, and emergency braking when a crash was unavoidable. A production version was to weigh 2,200 pounds, carry four people, and get 32 mpg. It also had 16 kph (10 mph) frontal and rear no damage bumpers and 80 km (50 mile) run flat tires.

Only years later have advanced air bags – as featured in the RSV – become standard in all light vehicles. In the decades since the ESV program and dynamic regulatory testing began, National Highway Traffic Safety Administration (NHTSA) now estimates that airbags save 2,500 lives annually, but we still lose about 12,000 people in frontal, 9,000 in side and over 10,000 in rollover crashes. We can do better by simply looking back to what the RSV program achieved.

## INTRODUCTION

The basic technology began sixty years ago when the transistor was newly invented. Cutting edge production technology was employed by the Navy to develop missile and fire control systems using subminiature vacuum tubes. Infrared optical systems were unknown except for secret military purposes like the Sidewinder missile. Navigation was by dead reckoning. Computers used punch card input and storage.

Nearly half a century ago, the General Motors research laboratories developed the high-performance electric vehicle called the Electrovair, shown in Figure 1, with an induction motor drive and solid state controller; the lunar rover shown in Figure 2, GM's mark on the moon; passive occupant protection; separation cruise control; optical lane following; and an electrochemical rechargeable lithium iodine engine.

**Figure 1. GM Electrovair.**

**Figure 2. Lunar Rover.**

## METHOD

This paper uses the history of automobile safety technology as developed in the late 60's and 70's as a basis for discussion and conclusions.

40 years ago the American Machine and Foundry (AMF) contracted with Minicars, Inc. to develop one of the Experimental Safety Vehicle (ESV) in competition with GM, Ford and Fairchild Hiller. The specifications were for kph 80 kph (50 mph) frontal impact protection to unrestrained occupants, 64 kph (40 mph) side impact protection and 48 kph (30 mph) rollover protection. All the specifications were met and AMF won the competition. All of the ESVs were heavy and ugly as illustrated by the AMF version in Figure 3.

**Figure 3. AMF Version of ESV.**

37 years ago, Minicars received a contract from NHTSA for the "Crashworthiness of a Subcompact Car". It was to develop structural modifications to a Ford Pinto such that it could provide 80 kph (50 mph) frontal impact protection and 48 kph (30 mph) side and rear protection. A companion program involved developing frontal airbags to work with the structure for unrestrained occupants. [1][2] The structural modifications were to create closed section boxes of thin sheet metal in the vehicle's structural voids to absorb energy. These sections were retrofitted then with the first dual chamber designed airbags. The resulting vehicle shown in Figure 4, a station wagon version, met all the specifications. A remarkable result because the Pinto was a flimsy vehicle in a US fleet of heavy, monstrous vehicles.

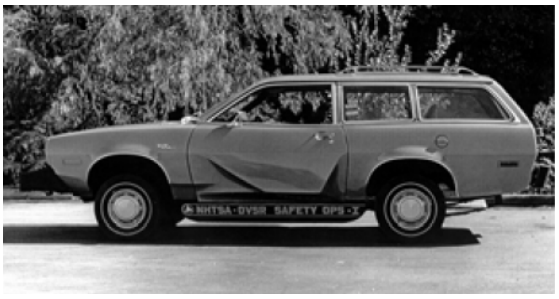

**Figure 4. NHTSA Subcompact Car Wagon.**

35 years ago Minicars received a contract for the phase 1 development of a Research Safety Vehicle (RSV) in competition with Ford, VW, Calspan/Chrysler and AMF. The RSV was to be characterized and specifications prepared for a 4 passenger vehicle, protecting unrestrained occupants in 80 kph (50 mph) frontal, 64 kph (40 mph) side and rear impacts and in a 48 kph (30 mph) rollover. The program began with an accident analysis considering the societal cost by vehicle class, clock position and Delta V range as shown in Figure 5 & 6.

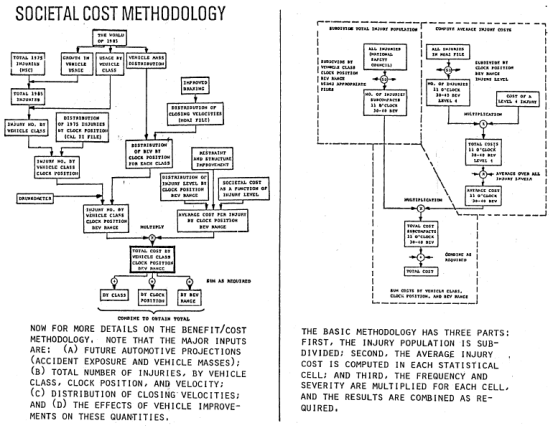


**Figure 5. Societal Cost Methodology.**

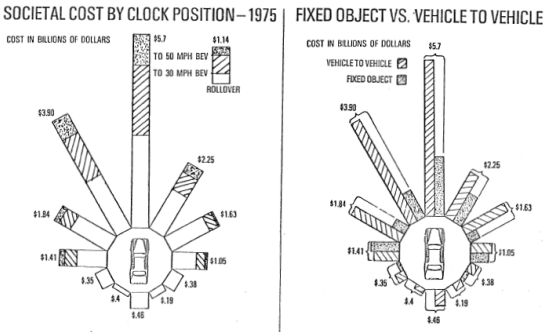


**Figure 6. Clock Position and Delta V Range.**

At the time the best data was from interpreting the Multi-disciplinary Accident Investigation (MDAI) files. That data by AIS level and impact clock position was as shown in Figure 7. It identified the angled offset frontal as the major source of frontal injury, although it is still ignored today. Since the current systems are designed for ± 9° frontal barrier tests, is there any wonder why we are saving 2500 lives and losing 12,000?

The structural design concept was carried over from the Subcompact Car Crashworthiness program. It was to be foam filled, thin wall, sheet metal structure. A "safety payoff analysis" was conducted to assess and order the benefits (payoff) from each additional safety design feature. The conceptual design is shown in Figure 8.

The detailed areas of different density foam filling are shown in the body and doors in Figure 9. The styling buck which defined the concept is shown in Figure 10.

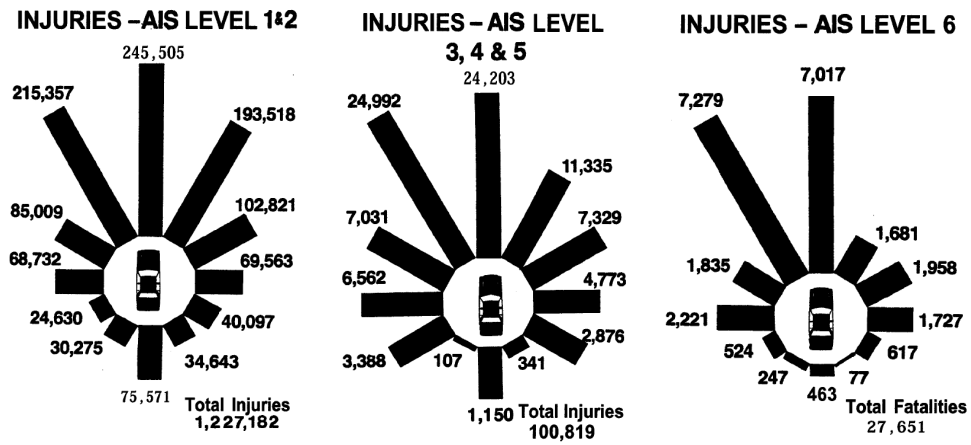


**Figure 7. 1970 Accident data by clock position and AIS level from MDAI files.**

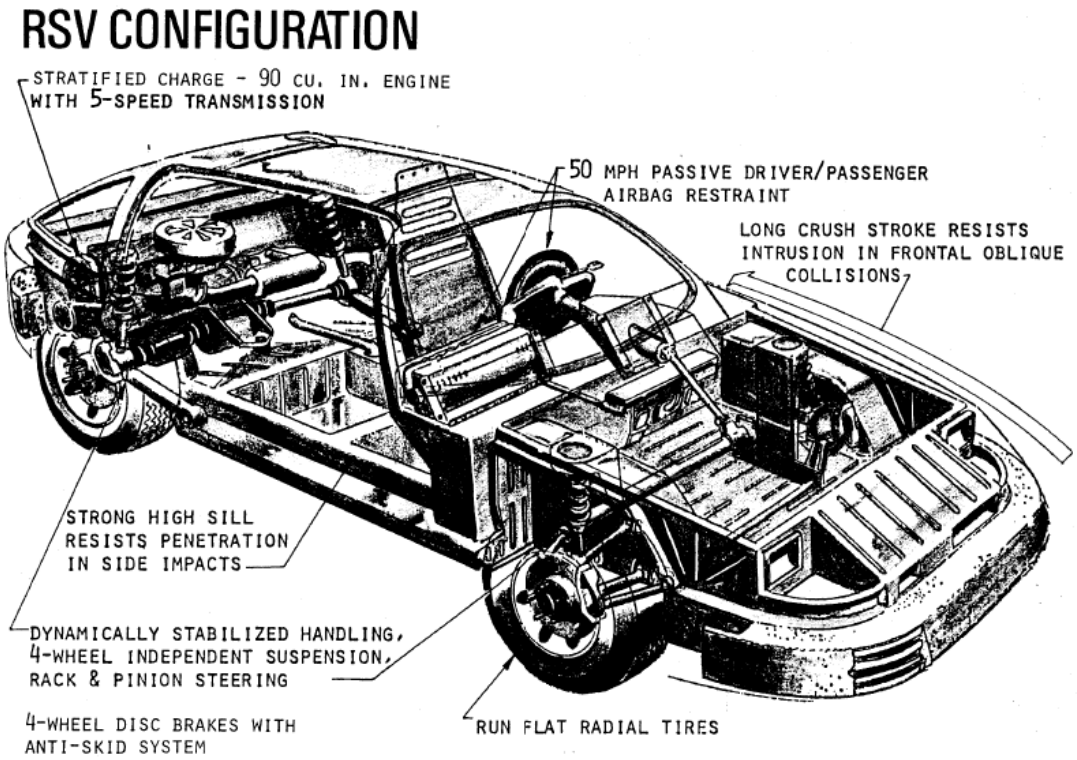


**Figure 8. RSV Conceptual Design**

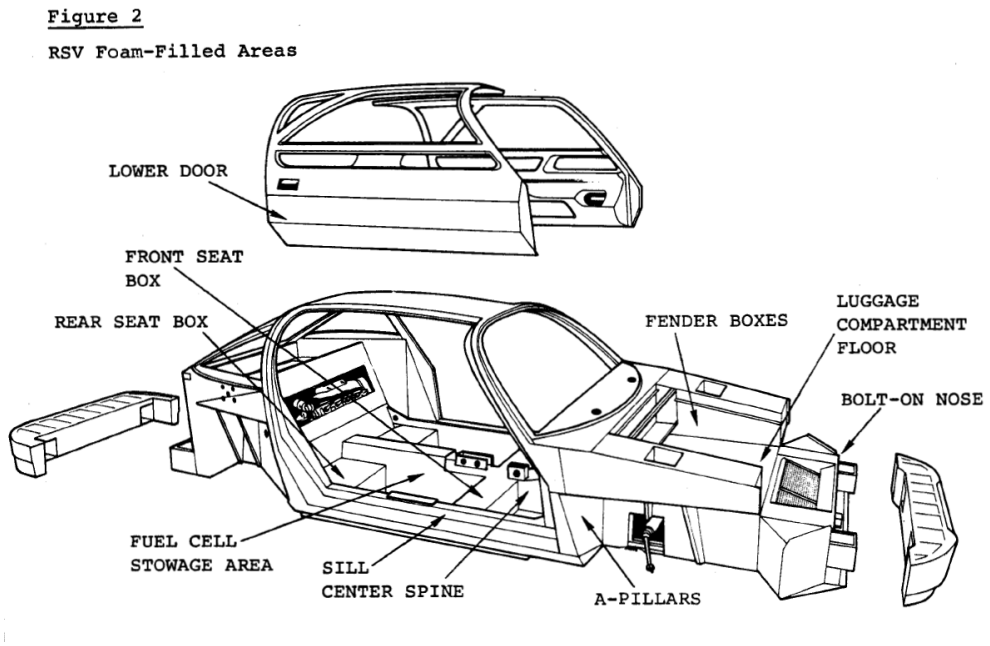


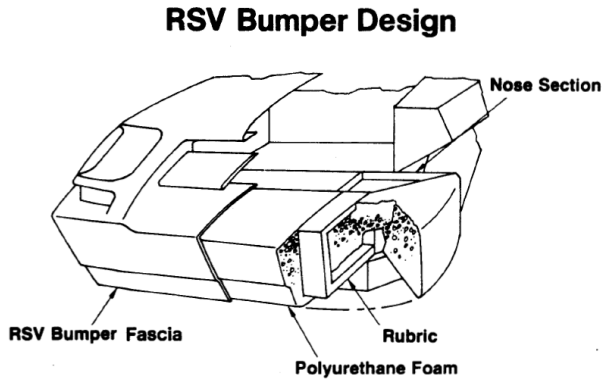


**Figure 9. Detailed areas of foam filling.**

**Figure 10. Side view of RSV.**

30 years ago the first prototype Minicars Research Safety Vehicle and the Large Research Safety Vehicle toured the United States in conjunction with a Department of Transportation, Public Service Announcement on television, narrated by Loren Green (of Bonanza). That Public Service announcement and the NHTSA commissioned film; "The RSV Answer" is available on request. [3] See Figure 11 and 12

**Figure 11. Minicars Safety Research Vehicle.**

**Figure 12. Minicars Large Safety Research Vehicle.**

The LRSV, like the Subcompact Car Crashworthiness Pinto was modified by stripping some 900 pounds from a 1978 Chevrolet Impala and substituting foam filled sheet metal box sections and installing a transverse mounted Volvo dual turbo charged engine matched to a four speed transmissions and front wheel drive. Three were built; one was frontal crashed at 64 kph (40mph) and a second at 48 kph (30 mph) in the side. The third was kept in Washington until destroyed. The administrator of NHTSA had it driven to Detroit and drove the president and executive VP's of GM, Ford and Chrysler around town. A drawing of the LRSV showing the foam filling is in Figure 13.

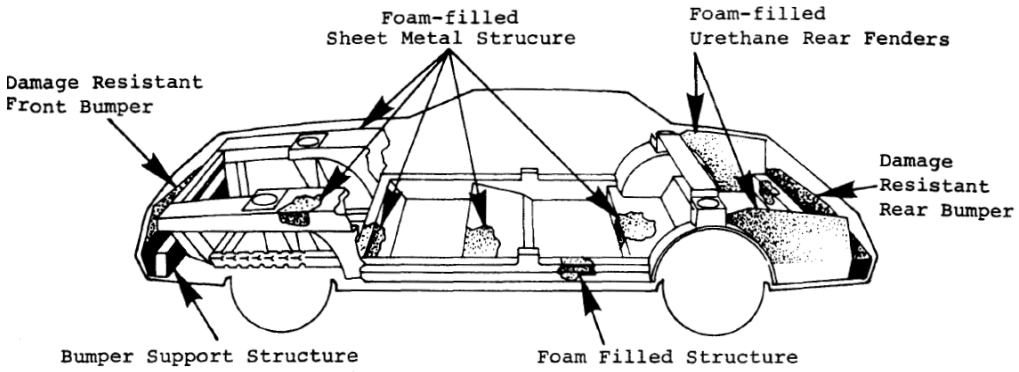


**Figure 13. Foam filled areas on the LRSV.**

29 years ago at the 1980 ESV conference in Wolfsburg, Germany, reports on the performance of 10 prototype vehicles independently tested in England, France, Germany and Japan were submitted. Except for handling deficiencies (panned by Porche and Mercedes) and normal prototype glitches, the vehicles did very well.

28 years ago in 1981 the final reports on the program were published. [4], [5], [6] The summary page describing the program is Figure 14.

**Technical Report Documentation Page**

| 1. Report No. | 2. Government Accession No. | 3. Recipient's Catalog No. |
|---|---|---|
| | | |

| 4. Title and Subtitle | 5. Report Date |
|---|---|
| The Minicars Research Safety Vehicle Program<br>Phase III - Volume I, Technical Final Report | September 1981 |
| | 6. Performing Organization Code |
| 7. Author(s) D.E. Struble, V.K. Ausherman, C.E. Strother, A.V. Khadilkar, S.R. Syson | 8. Performing Organization Report No.<br>FR-2100-09-81 |
| 9. Performing Organization Name and Address<br>Minicars, Inc.<br>55 Depot Road<br>Goleta, California 93117 | 10. Work Unit No. (TRAIS) |
| | 11. Contract or Grant No.<br>DOT-HS-7-01552 |
| 12. Sponsoring Agency Name and Address<br>U.S. Department of Transportation<br>National Highway Traffic Safety Administration<br>400 Seventh Street, S.W.<br>Washington, DC 20590 | 13. Type of Report and Period Covered<br>Final Report<br>Jan 1977 to Sep 1981 |
| | 14. Sponsoring Agency Code |

15. Supplementary Notes

16. Abstract

The objective of the RSV Program was to provide research and test data applicable to the automobile safety performance requirements for the mid-1980s, and to evaluate the compatibility of these requirements with environmental policies, efficient energy utilization, and consumer economic considerations. The program was designed to answer the question, "Can small fuel-efficient cars be made safe?," and to address such topics as: How safe should cars in general, and small cars in particular, be? What technologies will be required to make them this safe? Are these technologies feasible? Can they be, or have they been, sufficiently developed to justify the promulgation of more stringent safety standards?

The RSV Program has demonstrated that it is possible to make cars much safer than they are presently. It has produced automobile designs that are consistent, at affordable cost, with the national objectives for fuel economy and environmental protection. It has indicated, at least to a limited degree, that the technological findings are applicable, at varying levels, to a variety of car designs. And it has provided evidence that these findings can be wrapped in a package of considerable appeal to the public.

This Final Report is a comprehensive compilation of the findings of the Phase III efforts of Minicars, Inc. It describes the design and testing of the RSV systems, and the performance levels achieved. Specific topics include a vehicle description and performance specification, the structure, occupant restraints, braking and handling, propulsion, the vehicle exterior, driver controls, the radar and electronics, the Large Research Safety Vehicle, and the accident environment analysis.

| 17. Key Words | 18. Distribution Statement |
|---|---|
| RSV, Safety, Crashworthiness, Airbags, Radar, Large RSV, Foam-filling, High Technology RSV, Occupant Protection, Anti-skid Braking, Minicars, Automotive Electronics | Document is available to the U.S. public through the National Technical Information Service, Springfield, Virginia 22161 |

| 19. Security Classif. (of this report) | 20. Security Classif. (of this page) | 21. No. of Pages | 22. Price |
|---|---|---|---|
| Unclassified | Unclassified | | |

Form DOT F 1700.7 (8-72)

**Figure 14. Minicars RSV Program Final Report Cover.**

The overall dimensions and shape of the RSV are shown in Figure 15. Notice that the roof is rounded without corners to allow the vehicle to roll like a cylinder. It was a concept then and a proven geometric way to improve occupant injury potential today. See the companion papers in this conference "Vehicle Roof Geometry and its Effect on Rollover Roof Performance" and "A Proposed Rollover and Comprehensive Rating System". [7][8]

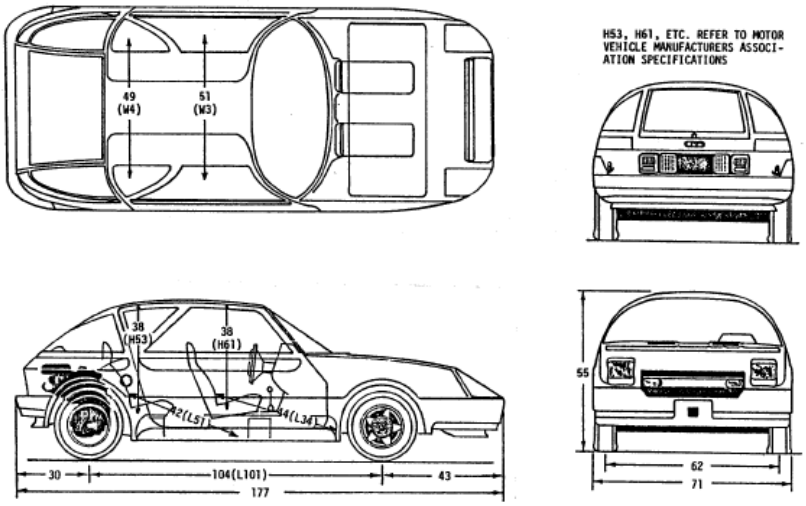


**Figure 13. Foam filled areas on the LRSV.**

**SAFETY CONCEPTS INHERENT IN THE RSV**

The research safety vehicle included and demonstrated the following innovative and unique features in the base design:

- 50 mph frontal impact protection airbags for unrestrained occupants of the front seat [4] (see Figure 16)
- 40 mile an hour side impact protection with adding and come posit glazed windows [9] (see Figure 17)
- 40 mph rear impact protection with seatbacks suspended from the roof with a clear plastic headrest [10] (see Figure 18)
- 10 mile an hour front and rear restorable bumpers [4] (see Figure 9)
- A 25 mph energy absorber that was replaceable behind the bumper [4] (see Figure 9)
- A rigid structure from the firewall in the rear to the foot well in the front [11] (see Figure 8)
- A Honda CVCC four-cylinder transverse engine in the rear with four speed manual transmission
- Doors that integrated with the structure providing longitudinal strength and side impact padding [10] (see Figure 19)
- An 84 mile per hour frontal offset impact capability
- A pedestrian friendly front end design.
- Gull wing doors (16" clearance to adjacent vehicles) which closed over structure for easy entry and exit to the front and rear seats (see Figure 20)

The passenger airbag system is shown in Figure 16. It is a large bag system, in which the torso portion is inflated first and then that bag is vented to the head bag. At that time less than 15% of vehicles had belts and wore them. The key issue for the industry as expressed by Dr. David Potter, executive VP of Environmental staff at GM, was product liability. Although not implemented in the base vehicle, the electronic version with proximity radar for emergency braking could pre-impact deploy the bags relatively slowly avoiding out of position and onset bag slap injuries to the chest. Although Nissan built their ESV around this deployment concept it is still

not in use today. Another innovation was the solution to rear impact head rests. As shown in Figure 17, a transparent plastic head rest was connected between the roof and the top of the seat back. This assured that in a rear impact the neck would go into flexion while allowing a lightweight seat back.

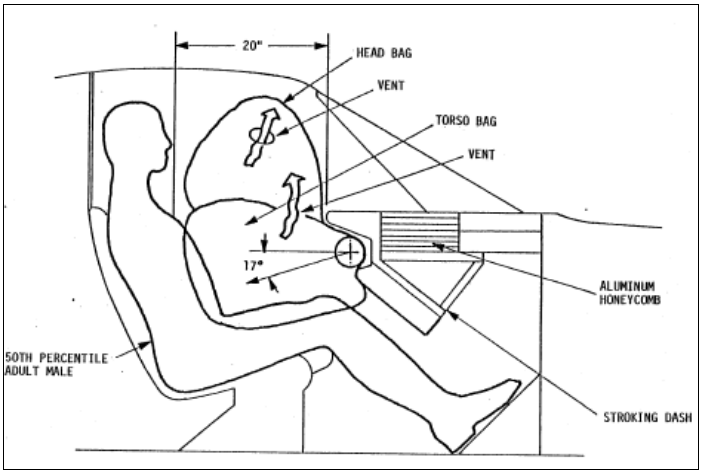


**Figure 16. Airbags for unrestrained occupants of the front seat.**

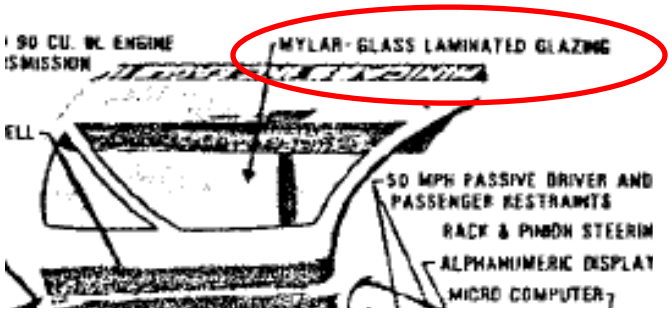


**Figure 17. Side impact protection with adding and composite glazed windows.**

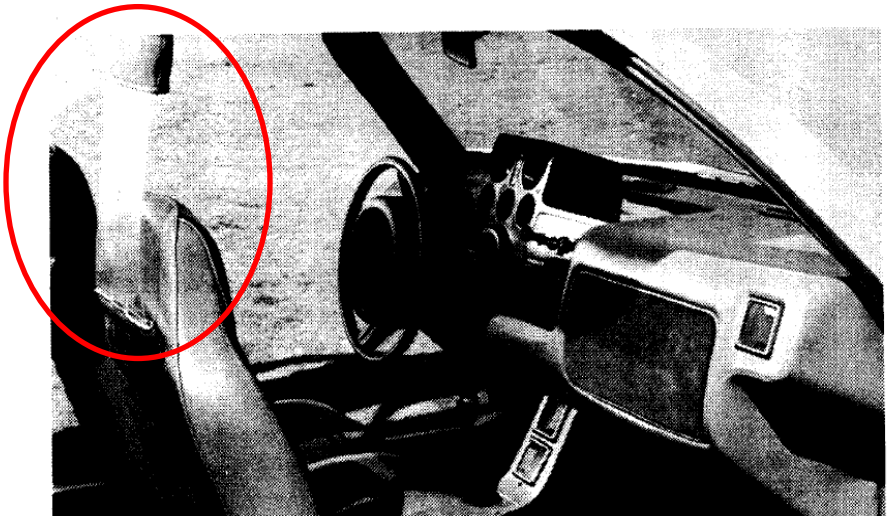

**Figure 18. Seatbacks suspended from the roof with a clear plastic headrest.**

The vehicle was designed with deeply padded gull wing doors for side impact protection. The windows were made of a glass plastic laminate which was integrated to the doors to avoid rollover ejections for the largely unbelted occupants of the time.

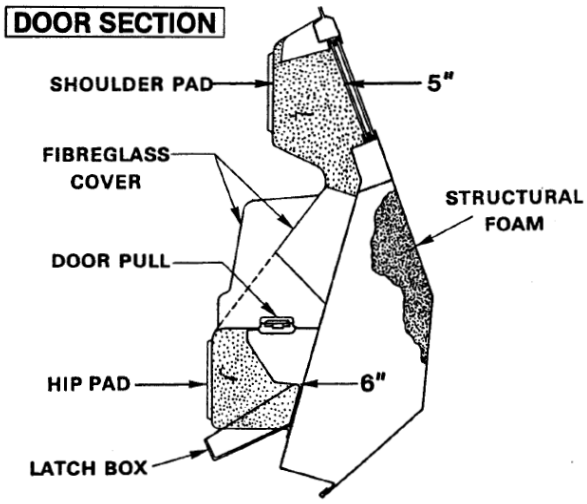


**Figure 19. Door with side impact padding.**

**Figure 20. Gull Wing Doors.**

The front end of the vehicle was designed for pedestrian and larger vehicle compatibility. It was designed in three sections. The bumper was of restorable plastic good to 16 kph (10 mph) but also to contact a pedestrian at up to 40 kph (25 mph) and capture him on the hood and luggage compartment. There was a bolt-on energy absorber of medium density foam which would collapse and absorb energy of another 24 kph (15 mph), before the third and main structural section was to deform. This provided a mild low G crash pulse as shown in Figure 21and 22.

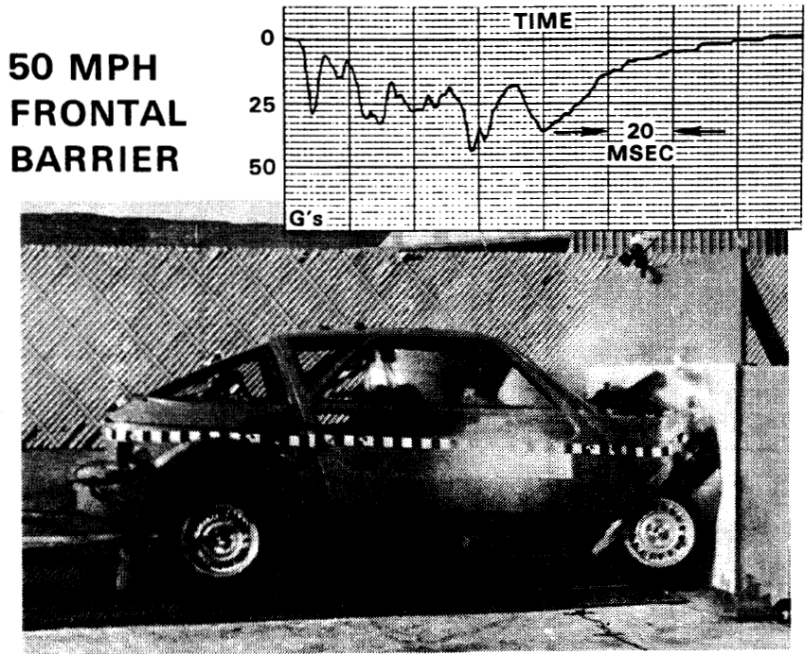


**Figure 21. 50 mph Front Barrier Test with the RSV.**

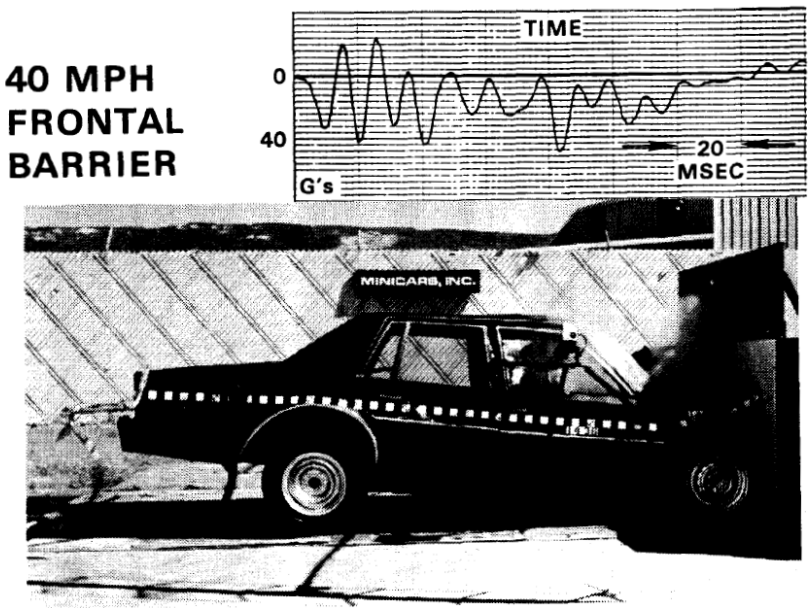


**Figure 22. 40mph Frontal Barrier Test with the LRSV.**

## THE ELECTRONIC RSV

Although the basic RSV was targeted as a production vehicle for 1985 a number of features were anticipated to be available a few years later. Those features were incorporated into an Electronic RSV [9], [12], which was identical to the regular models, as follows:

- A 4 speed electronically shifted automatic transmission
- A radar cruise control system
- Four wheel anti-lock brakes
- Radar activated emergency braking (Collision Mitigation System)
- Radar activated proximity warning
- airbag pre-impact firing sensors

## DISCUSSION

The Minicars RSV was such a departure from the U.S. industry position on what could be done in the way of safety improvements and occupant protection that NHTSA destroyed all vehicles, lost 22 boxes of test films and data and did not publicize the final report. But that is not the point. The point is that here we are 30 years later and though we are beginning to see some voluntary implementation of some features, it is because it may help to sell cars not necessarily because it will improve safety.

In the US, there are more than 10,000 fatalities each year in rollovers. Almost half of the fatalities are from ejections, which wouldn't happen with the RSV's pitch balance, composite windows, rounded roof and strong roof structure. [7]

Consumers review an occupant protection rating system which gives four or five stars to vehicles which don't protect 12,000 fatalities in frontal impacts and 9,000 in side impacts

At the time the RSV came into being the societal cost of crashes in the US was about $30 billion, today it is about $300 billion. In the current reassessment of economic priorities, there ought to be some consideration for implementing improved safety features in small economical cars. The myth that small cars cannot be made as safe as large cars must be dispelled. It is only a correct statement if the caveat "all other things being kept equal" is added.

The airbags in the RSV were designed with dual chambers, shown in Figure 23 whose walls limited the extent to which the bag protruded towards the occupant and it distributed the gas through a central chamber venting the gas to peripheral chambers. The driver bag was wheel mounted shown in Figure 24 and 25 on a collapsible column which provided 5 inches of additional decelerating stroke. The size of the bags captured the occupant such that he was protected in 30° principle direction of impact force circumstances. Current bag systems provide 9° of principle impact force protection to 35 mph.

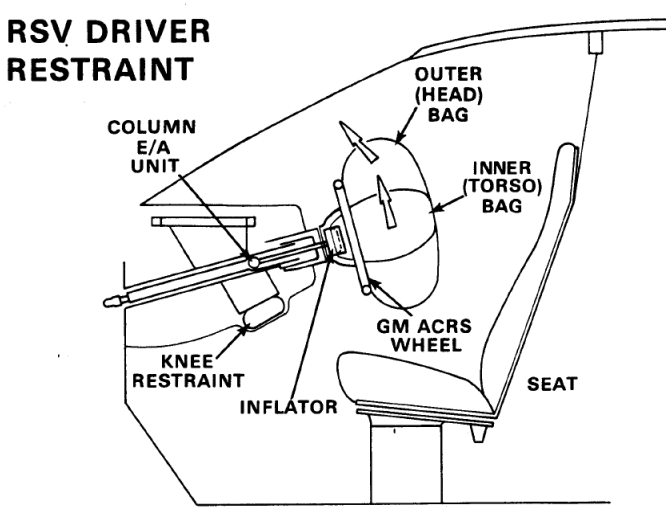


**Figure 23. Driver restraint side view.**

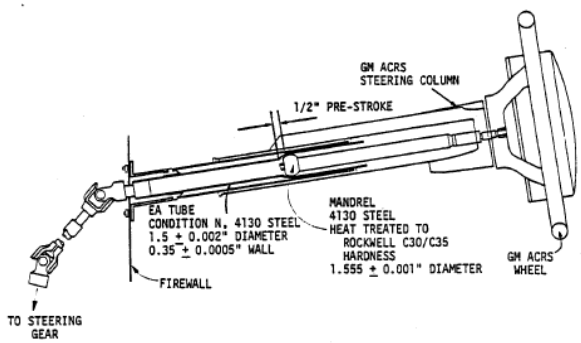


**Figure 24. Driver steering column.**

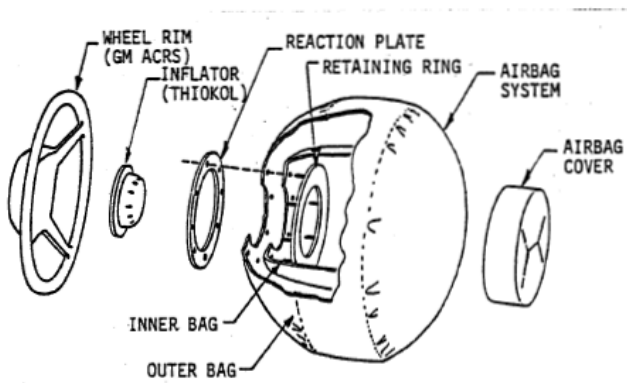


**Figure 25. RSV collapsible column and driver bag.**

When airbags were finally implemented as a supplemental safety system it was projected that they would be 9% better than the three-point belts. That projection seems to have come true since NHTSA estimates that airbags save 2,500 lives annually. Today's airbags are small, non-chambered and only cover 9 degrees of impact. We still lose 12,000 people in frontal collisions every year. If the type of airbag built into the RSV were in use today, at least 6000 more lives would be saved. [7]

The RSV wasn't a dream and its performance can be a reality today.

## CONCLUSIONS

Although designed 35 years ago the RSV is still a prototype for improved occupant protection safety. Two of the features of the RSV, highlighted here are:

- the roof structure, geometry and composite glazing
- the pre-impact sensed deployment of chambered airbags

The combination of just these two features alone has the potential to save thousands of lives.

The author is highly concerned that in the U.S. we are complacent and satisfied with the results of the limited safety features the manufacturers have implemented and the Department of Transportation has done nothing about it for years. Still we loose thousands of Americans in Frontal and Side Impact Crashes and it is completely unnecessary. The RSV features would have saved many lives that have been lost, but for the governments indulgence of the manufacturers reluctance to put safety ahead of profits. And the worst thought is that it continues today, where manufacturers seem to say they have done all they can with safety for Frontal and Side impacts, yet the RSV shows definitively that they have not.

**REFERENCES**

[1] "Improving the Crashworthiness of Subcompact Cars," 1973, DOT-HS-1 12-3-746.

[2] "Advanced Air Bag Restraints for Subcompact Car Drivers", 1973, DOT- HS-1 13-3-742 5.

[3] "RSV - The Answer", Video

[4] Struble, D.E., V. Ausherman, C. Strother, A. Khadilkar and S. Syson. 1981. "The Minicars Research Safety Vehicle Program Phase III." Vol. I. Technical Final Report.

[5] Ausherman, V., A. Kadikar, S. Syson, C. Strother, and D. Struble. 1981. "The Mincars Research Safety Vehicle Program Phase III."

[6] Friedman, D. 1981. "The Minicars Research Safety Vehicle." Minicars, Inc.

[7] Friedman, D., G. Mattos and R. Grzebieta. 2009. "Vehicle Roof Geometry and Its Effect on Rollover Roof Performance." ESV 2009.

[8] Friedman, D., G. Mattos and R. Grzebieta. 2009. "A Proposed Rollover and Comprehensive Rating System" ESV 2009.

[9] Friedman, D. and E. Belohoubeck "The Near-Term Prospect for Automotive Electronics Minicars Research Safety Vehicle," RCA Laboratories, SAE 780858, September, 1978.

[10] Struble, D.E. 1979. "Highlights of the Minicars' RSV Program." Engineering & Research, Inc.

[11] Minicars, Inc. "RSV Phase I.". brochure

[12] Kossar, J. "The High Technology Research Safety Vehicle," Experimental Conference. Germany. 1980.