ONE SIZE DOESN'T FIT ALL

Donald Friedman
Center for Injury Research
USA
Paper No. 11-0401

ABSTRACT

Modern passenger cars and trucks are designed for the young 50th percentile male and adjustments are provided to accommodate the 5th to 95th percentile occupant. However, the accommodating seating and occupant protection systems are grossly inadequate for the smaller people and the 30% of the U.S. population who are obese as well as those with the diminished muscular strength and increased fragility of age. The same considerations apply to the optional inclusion of driver aids.

Automotive design staffs rarely include professionals over the age of sixty because mass marketing focuses on the young to middle aged population. But the population is aging and life expectancy now reaches to the eighties. Cars can now be purchased with a myriad of options but none include a senior package. Aftermarket sales of sunroofs, electronics, etc., and even limousine conversions are commonplace but no design effort has focused on an occupant protection package for these smaller, aging, older, fragile, obese people. This paper highlights what can be done technically.

INTRODUCTION

The safety act of 1965 initiated the concepts of structural crashworthiness and occupant protection. Cars didn't have seatbelts and these concepts were not quantified. The Department of Transportation was born with aircraft industry and academic staff. Research and experimentation were based on physics and iterative testing. The fundamentals of crashworthiness focused on structural integrity, maintenance of the occupant survival zone and 50 mph frontal impacts. The concept of occupant protection focused on the second collision between the occupant and the dash and means to avoid acceleration injury. People refused to use their belts and a worldwide effort to develop airbags was initiated. The idea was to rapidly insert a soft air cushion between the occupant and the instrument panel as a substitute for the belts.

The problem became whether the airbag energy produced more injury than it prevented. As a result the combination of belts and supplemental restraint airbags was born. The belts would work in low-level crashes (where the energy in the collision was less than the energy in the bag) and the bag would supplement the belts in high-energy collisions. Then injury criteria and anthropometric dummies were developed and the idea of dynamic compliance tests was implemented. Since then the ground rules haven't changed much in that vehicles must be designed to protect a 50th percentile male dummy in 30 mph compliance tests to established injury criteria and must accommodate a 5th female and 95th percentile male dummy.

The consequence of regulations (as estimated by NHTSA) has been to save 15% of the 40,000 lives that would have been lost each year. The tragedy is that government and industry have agreed that they have done and are doing all they can in crashworthiness and occupant protection and have turned their attention to driver aids to avoid or reduce the number of accidents and thereby reduce casualties. A testament to that position is that by international accounts the U.S. now ranks about 14th in the world in fatality and casualty rates. Countries who have adopted the Swedish Government's "Vision Zero" policy (striving for zero accident deaths) have reduced their casualty rates to 1/4 of ours and getting better without high tech driver aids.

The U.S. economy in GDP terms is four times our nearest competitor, our consumption per capita is rising at about 7% per year and the quality of life is among the highest in the world. On the other hand life is not simple anymore. The same technology that makes life good, is for the most part beyond our comprehension and impossible to fix without special knowledge and tools.

The social network revolution which is the result of personal interactive instantaneous communication is likely to change our political, economic, environmental, health care, theological and corporate governess way of living. Those changes will hopefully be in time since, our rate of consumption is unsustainable. On the automotive front we need to get back to basics.

One Size Fits All

Modern passenger cars and trucks are designed for the 50th percentile male driver and adjustments are provided to accommodate the 5th to 95th driver. Accident avoidance standards like vision (day and night; front, rear and side), handling, steering and braking are accommodating but far from optimal for drivers other than the 50th percentile male. The CarFit educational program is the best of the available adjustments [1].

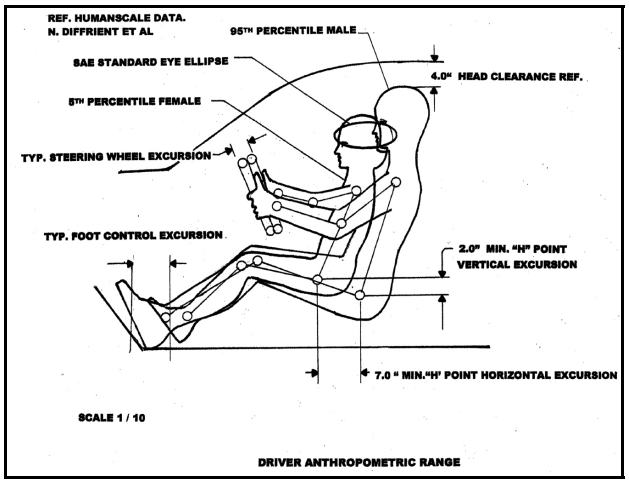

Figure 1. Driver anthropometric range.

Custom or Customizing Vehicles

Driver safety would be improved by installing crash avoidance and convenience feature and/or crashworthiness improvements. There are at least two categories of devices which can aid drivers. One category is anti-lock brakes and its derivative, electronic stability control, and it works for everyone to limit the severity of crashes [2]. Likewise development is underway for sophisticated aids like blind spot detection, adaptive cruise control and lane wander and departure systems [3]. The second category includes after-market-additions currently available like: pedal extenders, wide angle rear view mirrors, seat belt load distributors and limiters, seat adjusters, proximity warning sensors, hand controls, back-up and low light level vision cameras, etc. These devices are after-market additions or options on certain models which customize and can optimize the special needs driver/vehicle interface.

Recent Analytical and Experimental Research

Experiential data and needs For the past three years, the author (Don Friedman) has lived at a full service (independent and assisted living) senior residential community of about 400 people in 300 apartments whose average age is 80. The resident assigned parking lot is full with about one car per apartment. The facility provides all reasonable amenities including scheduled event bus service. A frequent subject of dining room dinner conversation is health, children and grandchildren, transportation, driving confidence and travel. Of particular interest to this study is the strong desire for independence and reluctance to accept aid which burdens family. My observations are that given the status quo in driver/vehicle interaction, confidence and confusion in driving safely erodes with age. However, my conclusion is that significant improvements in driver/vehicle interaction would dramatically improve confidence and safety, and reduce confusion. Those improvements should not involve sophisticated electronic manipulation or interpretation (older people prefer a "one button" or person to person interface).

In a group of environmentally influenced safety conscious drivers (like my own large extended family), my observations indicate they follow the statistical pattern of carelessness in youth, developing respect for the consequences of accidents in middle age, and deteriorating confidence in their and their parents driving as they age. Figure 2 shows NHTSA's plot of accident fatality rate as a function of age. This retrofit of an optimized vehicle and driving interface would benefit any person impaired by their stature, health, and age.

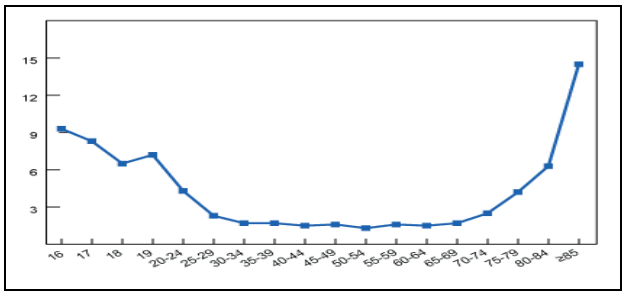

Figure 2. Passenger vehicle crash deaths per 100 million miles traveled by driver age.

Previous studies, analyses, efforts and reports
Previous studies have drawn similar conclusions and suggestions for what might be done, such as CarFit, MIT's AgeLab [4], the 2007 Conference of the American Society on Aging, and the National Council on Aging [5] and IIHS Status Report [6-11].

Silverstein of U of Mass. states that, "by the year 2030, 70 million Americans will be 65 or older. Current estimates suggest that, 2% of the population ages 65-74, 19% of the population ages 75-84, and 47% of the population age 85+ are likely to suffer from Alzheimer's disease or a related disorder translating into about 4.5 million Americans today. By the year 2050, the number of American's with Alzheimer's disease could range from 11.3 million to 16 million (Alzheimer's Association, 2005). Most persons with Alzheimer's disease reside in the community with their families and about 20% live alone. As with many older adults, without appropriate interventions, the primary mode of transportation for persons with dementia is likely to be driving [12]."

Certainly a dialog on what to do about driving with impairments and providing alternate transportation is important. A team of experts, uniquely qualified to address the specific question of customizing and retrofitting an existing vehicle with an optimized safety interface to the individual driver's and/or occupant's physique, health and mental characteristics is the first step.

As an active, working octogenarian living in a senior community, I firmly believe that the proposed benefit prioritized approach will significantly aid the aging society at a very reasonable cost (less than 10% of the original cost of the car). Likewise, this approach is sufficiently flexible, yet thorough; to apply to the unique needs of physically and/or mentally challenged individuals.

As examples, in a recent dinner table conversation a widow explained that her husband usually drove but she couldn't see over the wheel without a thick cushion and it made it difficult to reach the pedals. Repositioning the seat upward and rearward and adding pedal/wheel extenders would make a big difference.

My wife, who is 78 years old and has been driving since she was 18 without a significant accident, recently took a driver's test to renew her California state driver's license. She did not know about, have or read the California manual for taking a driver's test [13]. She failed the test for "cognitive" reasons, specifically because in the first 11 instructions to make a turn or proceed through an intersection with a stop sign she failed to come to a complete stop, wait three seconds and look in both directions before proceeding. She was demoralized and willing to accept a limited to local streets driver's license. However, because I felt she was a competent driver, we hired a retired inspector from a driver training service and retraced the instructions. She did everything right, except she did a California stop i.e. a virtual stop without a three second pause. An automated verbal prompt would have saved the day. We have appealed the limited license and are awaiting an appointment for a new test. If I hadn't interceded she would have been miserable for giving up her independence.

The premise of this paper is that vehicles need to be designed or retrofitted to fit the user and its intended purpose. Safety for the accommodated population in previously purchased vehicles would be improved by retrofit installations of crash avoidance and convenience features and/or crashworthiness improvements for the elderly. There are at least two categories of devices which can aid elderly or impaired drivers: One is electronic stability control and sophisticated aids like blind spot detection, adaptive cruise control and lane wander and departure systems. The second includes after-market-additions like: pedal extenders, wide angle rear view mirrors, seat belt load distributors and limiters, inflatable belts, three dimensional seat adjusters, proximity warning sensors, hand controls, back-up and low light level vision cameras, etc.

Some new small car production designs need to adjust their size, capacity, and performance for single purpose use and be custom tailored to fit the owner. The laws need to be adjusted to allow such designs and define their operating territory. No fault insurance may eliminate the need for tort reform and litigation. The myths and half truths about safety must be dispelled to support consumer confidence. The approach to convince new car production manufacturers will have to be preceded by mass retrofit demonstrations. This paper then will focus on retrofit.

What Can Be Done

As previously mentioned for the past three years, the author has lived at a full service (independent and assisted living) senior residential community of about 400 people in 300 apartments whose average age is 80. The resident assigned parking lot is full with about one car per apartment. The facility provides all reasonable amenities including scheduled event bus service. A frequent subject of dining room dinner conversation is health, children and grandchildren, transportation, driving confidence and travel. Of particular interest to this study is the strong desire for independence and reluctance to accept aid which burdens family. My observations are that given the status quo in driver/vehicle interaction, confidence and confusion in driving safely erodes with age. However, my conclusion is that significant improvements in driver/vehicle interaction would dramatically improve confidence and safety, and reduce confusion. Those improvements should not involve sophisticated electronic manipulation or interpretation (older people prefer a "one button" or person to person interface).

One approach would be to establish a dialog on what to do about driving with impairments and providing alternate transportation. The focus should be to address the specific question of customizing and retrofitting existing vehicles with an optimized safety interface to the individual driver's and/or occupant's physique, health and mental characteristics. The expected result is to extend the opportunity to drive and ride safely with advancing age and it has the associated advantage of ride sharing with people in the same community.

There are two main approaches: Safety Aids and Improved Occupant Protection. Both require addressing and correcting the "one car fits all drivers and passengers" provisions of modern vehicle performance regulations. Then the accident avoidance and occupant protection features of existing vehicles may be significantly improved, by customized retrofit to fit individuals who are not scaled from alert 27 year old male solders with physically trained and tempered musculature.

Driver safety aid Recent safety studies, injury data and readily available enhancement devices to improve a 5th, 50th, or 95th percentile individual's driving performance, confidence and mobility are available. A key consideration will be the positioning of 5th and 50th drivers to match the eye ellipse of the 95th percentile (full

rear seat and 4" headroom) for improved Occupant Protection enhancements. Such an investigation would involve installing selected or previously developed aids for each size driver in one of three vehicles. A fourth unmodified vehicle would serve as the comparative base vehicle. Evaluating driver performance enhancements should be by human factor interviewing of potential users for comfort, convenience and acceptability as well as conducting comparative tests in the base and enhanced vehicles by a state licensed driving instructor using the California scoring form. The test population should include a significant number of people in each size, weight and health category.

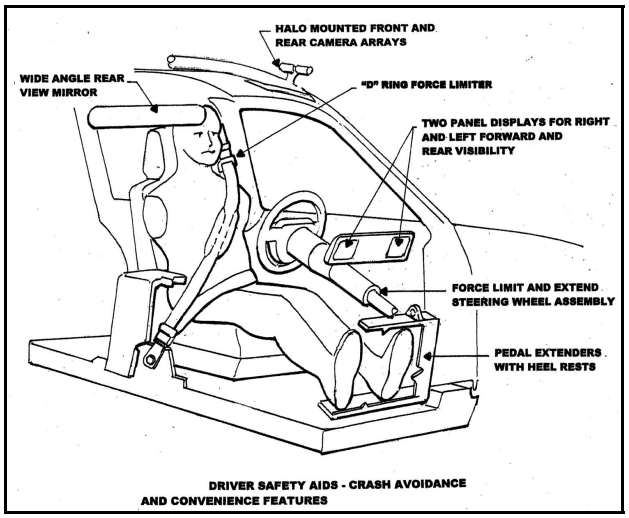

Figure 3. Driver safety aids – crash avoidance and convenience features.

<u>Improved occupant protection</u> Using a finite element vehicle and occupant model, assess the proposed and expected improvement in injury potential performance between baseline and modified vehicle safety devices. An estimate of the injury benefit payoff from available statistics for all combinations of occupant stature, health, enhancement device and crash mode should be made. The next step would be to combine and sled test the selected enhanced devices to significantly reduce a 5th, 50th, or 95th percentile occupant's injury potential for normal, obese and fragile levels of health and strength in all medium severity crash modes (frontal, side, rear and rollover).

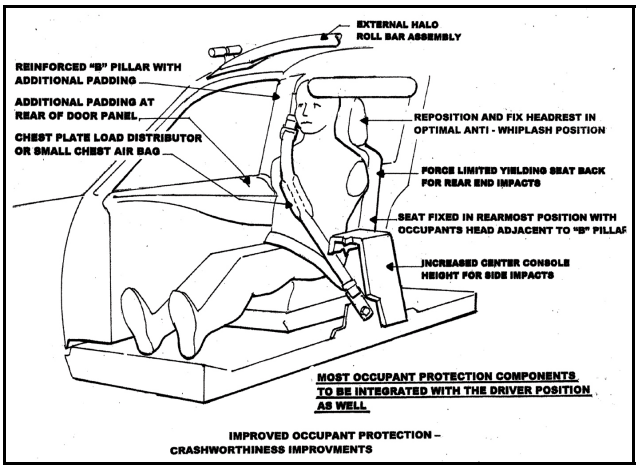

Figure 4. Improved occupant protection – crashworthiness improvements.

Experimental examples

In an effort to demonstrate the effect of reduced musculature in frontal and side impact accidents a simple modification to the stiffness of the Hybrid III dummy was made. The stiffness was reduced to 30% of the original dummy neck, but was still three times stronger than the musculature which keeps our heads erect in normal activities. The results were:

<u>Frontal impact protection</u> The reduction in musculature and orientation of the Hybrid III neck as developed for rollover testing appears to explain anomalies in frontal and side impact protection. For instance the IIHS reported an increase in fatalities with advanced airbags compared to the immediately previous designs. An identical set-up for frontal impacts at typical airbag deployment initiation speeds of 15 mph is shown with the Hybrid III dummy with its original and reduced musculature neck in Figures 5 and 6, respectively. The flexibility of the reduced musculature puts the dummy's head in close proximity to the deploying airbag with serious injury consequences if the airbag fires and from striking the wheel hub if it doesn't.

Figure 5. Hybrid III dummy with original musculature neck.

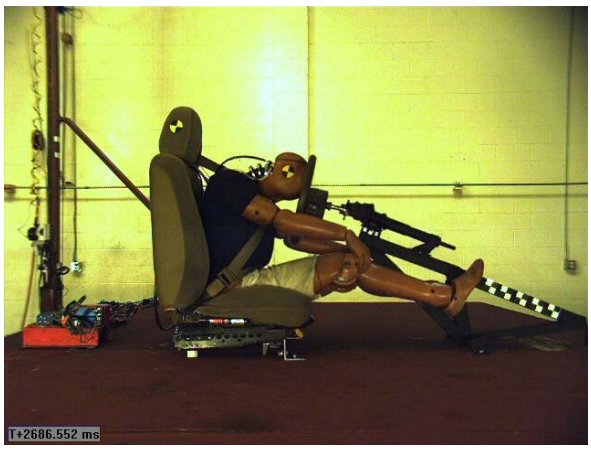

Figure 6. Hybrid III dummy with reduced musculature neck.

Side Impact Protection Window curtain airbags are now in use as head impact protection for side impacts and as such deploy at 100 to 120 mph. Rollover activated window curtain airbags for ejection protection deploy at 25 to 50mph. If the side impact airbag is activated during a rollover because of the vehicle side being in proximity to the ground while the occupant is "up and out" against the roof rail the result may be head and brain trauma, diffuse axonal injury, and coma. A solution would be to have two or variable inflators and change the rollover sensing algorithm to override and inhibit the side impact deployment gas generator.

CONCLUSIONS

Conceptually, subject to an injury payoff benefit analysis and the specific occupant and car to be modified, the retrofit modifications could consist of some or all of the following in order of relative cost:

1. Driver Safety Aids - Crash Avoidance and Convenience Features:

- Add pedal extenders and heel rests to fit the subject size occupant.
- Add a wide angle rear view mirror.
- Add rear and curb proximity sensors with audio warning.
- Add oral warning prompts keyed to braking and turn signals to stop, look right/left, etc.
- Install a rotating contoured all-belts-to-seat for safety, easy access and positioning.
- Install two rear low light level camera arrays*
- Install two frontal low light level camera arrays*
- Install two panel displays for right and left forward or rear visibility.*
- Add a retrofit ESC to the anti-lock braking system if available.
- Add a GPS transmitting speaker cell phone to emergency road service for person to person location and directions to destination.

*Conduct human factors tests to see if the elderly can handle such displays.

2. Improved Occupant Protection - Crashworthiness Improvements:

- Move and fix the seat to its rearmost position.
- Recline the seat back so the occupant's head is next to the B-pillar.
- Reinforce and add padding to the B-pillar.
- Place a shoulder bolster on the rear of the door.
- Reposition and fix the headrest to the optimal anti-whiplash position.
- Adjust the seat to allow 4" of headroom for the subject size occupant.
- Force limit the D-ring and/or the latch anchor of the restraint system.
- Add a chest plate fitted load distributor to the shoulder belt or
- Add an inflatable belt air bag as a 4 point shoulder belt or to the underside of the existing belt.
- For occupants with spinal bone degeneration (spondylosis) it may be necessary to wear a tethered hat.
- Force limit and extend the steering wheel.
- Add a D-ring to D-ring belt to effect a yielding seat back for rear collisions.
- Increase by 8" the height of the center console by standoffs to provide far side occupant protection in near side impacts. [An example is the Camry console which starts at the elbow and goes back. Instructions say to raise the whole console and extend/move it forward to provide separation between the driver and front seat passenger.]
- Add an external roof crush limiting Halo which can also support the cameras.

LIMITATIONS

There are some limitations to what can be done without violating Certification to FMVSS [14]. Indications are that the anticipated devices satisfy the requirements but we need to pay attention to this restriction. Very recent studies of IIHS indicate 15% increased mortality to women over 62 with advanced air bags [9]. This has been considered in our occupant protection task proposal but may require additional tests. We are aware of the economic factors which have reduced accident and fatality rates, but believe this research compensates because it is applicable to those with obese and injury prone physiques and health issues other than seniors.

REFERENCES

[1] CarFit Brochure, 2009. http://www.car-fit.org/
[2] NHTSA 49cfr571.126 (10-1-06 Edition)
[3] Stein, J. 2010. "Continental Sees Shift to Affordable Safety Technology." Automotive News, June 21, 2010.
[4] http://agelab.mit.edu/
[5] Finn, J and N.M. Silverstein. 2007. "Transportation and Community Mobility Track", Joint Conference of the American Society on Aging and the National Council on Aging, Chicago, IL, March 2007.
[6] IIHS Status Report. 2001. "Special Issue Older Drivers," Vol. 36 No. 8, September 2001.
[7] IIHS Status Report. 2007. "Special Issue Older Drivers." Vol. 42 No. 3, March 2007
[8] IIHS Status Report. 2008. "Older Drivers Fatal Crashes Trend Down." Vol. 43 No 11, December 2008
[9] IIHS Status Report. 2010. "Airbags Have Evolved." Vol. 45 No 1, February 2010.
[10] IIHS Status Report. 2010. "Senior Drivers Aren't Causing More Crashes." Vol. 45 No 6, June 2010.
[11] Preusser Research Group 2010. "Restricted Licensing Among Older Drivers." Trumbull, CT, March 2010.
[12] Silverstein, N.M. 2006. "Overview of Issues Associated with Dementia, Driving, and Community Mobility Options." International Conference on Aging, Disability and Independence." February 1, 2006.
[13] California Driver's Handbook
[14] Federal Regulations, Title 49 C.F.R. part 567 Certification http://law.justia.com/us/cfr/title49/49-6.1.2.3.32.html