IMPLEMENTATION OF THE UNSW JORDAN ROLLOVER SYSTEM AT SYDNEY'S CRASHLAB TEST FACILITY

Raphael Grzebieta
Andrew McIntosh
Garrett Mattos
Keith Simmons
George Rechnitzer
Mario Mongiardini
Transport and Road Safety (TARS) Research, University of New South Wales,
Australia
Ross Dal Nevo
Colin Jackson
Crashlab, Roads and Maritime Services, Transport for NSW,
Australia
Paper Number 13-0120

ABSTRACT

This paper describes how the Jordan Rollover System (JRS) dynamic test rig was adapted for research use in the New South Wales State government's Crashlab® crash test facility used for Australian NCAP and regulatory crash testing. Development and installation of the University of New South Wales (UNSW) JRS was funded by the Australian Federal Government's Australian Research Council (ARC) and industry partners. It is one of three rigs now operating in the world: the original Center for Injury Research (CFIR) JRS, the Dynamic Rollover Test System (DRoTS) at the University of Virginia, and the UNSW JRS in Sydney.

Construction of the UNSW JRS was the first phase of the much larger Dynamic Rollover Occupant Protection (DROP) research program which is funded by the ARC and industry partners, to establish which combination of crash severity, roll kinematics, biomechanical injury criteria, crash test dummy, and restraint systems, address the major proportion of fatalities and serious injuries occurring to seat belted and restrained occupants involved in rollover crashes.

The design of the UNSW JRS focused on functionality for research purposes while at the same time ensuring operational flexibility within a regulatory and commercial crash test facility. Data sources used for the design phase included: rollover crash test results on a variety of vehicles carried out using the CFIR JRS; FMVSS 208 dolly rollover crash tests carried out by other researchers; rollover fatality crash data and in-depth crash reconstructions from Australian Coroners Information System (NCIS) and from the NASS-CDS. These data were used to determine what features were essential for using the UNSW JRS as a comprehensive research tool to explore different initial test conditions (roll rate, drop height, roll, pitch and yaw angle) that could possibly replicate real-world rollover crash conditions where serious injuries occurred.

Features of the test rig design adress issues concerning: roadbed decoupling; rig mobility; roadbed towing; lighting; timing synchronisation of the vehicle drop for a given roll rate and roll angle in terms of accuracy and repeatability; and recording data and sensors compatibility. Commissioning rollover crash tests of a small and medium passenger cars and a large four wheel drive vehicle were carried out to establish test rig functionality and identify issues concerning rig operation. Results from the commissioning tests are presented.

It was concluded that the UNSW JRS can be adapted to a commercial or government crash test facility. A critical issue was vehicle impact synchronisation due to the complexity of decoupling roadbed movement from the roll propulsion. Another issue that continues is the ability of the rig to replicate real world crashes which may be significantly more severe than the test rig has to date been used and/or designed for. This is further discussed in the paper.

INTRODUCTION

Rollover crashes are very complex events. Despite over 40 years of international research and expertise devoted to this issue, the solution to the trauma resulting from such crashes continues to be elusive in terms of rating a vehicle's rollover crashworthiness. To date, there is no viable dynamic crash test procedure implemented by either a consumer body or government that protects occupants in rollover crashes. The reasons for this are set out in a sister paper [1] and in a paper which first appeared in the proceedings of the International Crashworthiness Conference ICRASH 2012 held in Milan, Italy, titled "The

Dynamic Rollover Protection (DROP) Research Program" [2]. This paper summarises sections relating to the JRS taken from the ICRASH 2012 paper. Readers are directed to the full ICRASH 2012 paper for a more comprehensive discussion of the issues presented here and in [1].

Presently, two countermeasures have been introduced in Australia to address rollover crashes. The first is a preventative measure, i.e. Electronic Stability Control (ESC). The Australian Government introduced an Australian Design Rule, based on Global Technical Regulation No.8, for the mandatory fitting of ESC to passenger cars and Sports Utility Vehicles (SUVs) from November 2011 (for new models) and November 2013 (for all vehicles) [3, 4].

The second countermeasure is the introduction of a quasi-static roof strength requirement based on the Insurance Institute for Highway Safety (IIHS) rating system [5]. In order to obtain five stars under the Australian New Car Assessment Program (ANCAP) in 2014 and 2015, a vehicle will be required to have at least 'marginal' roof strength where the strength to weight ratio (SWR) for a single sided roof crush will need to be 2.5 or greater. The minimum SWR requirement will rise to 'acceptable' (3.25 or greater) for both 2016 and 2017 [6]. Presumably, the intention is to raise the SWR requirement to 'good' (4.0 or greater) in following years.

The IIHS and ANCAP roof strength requirement is based on a number of studies that to date have found a positive relationship between the amount of roof crush, roof strength and the likelihood of serious injury in rollover crashes [7-16]. However, as argued by Grzebieta *et al*. [1, 2], and identified by Bambach *et al*. and Mattos *et al.* [15-17], analysis of crashes involving contained and restrained occupants involved in single vehicle pure rollover crashes that occurred in the United States (US), serious injuries to the thorax, head and spine can still occur even when there is little or no roof crush. This highlights the need to improve occupant restraint systems in conjunction with strengthening the roof.

It is worth noting that the US introduced two further tests in an attempt to better assess the potential of a vehicle to cause injuries that may occur in a rollover crash, namely Federal Motor Vehicle Safety Standard (FMVSS) 201 for Occupant Protection in Interior Impact which assess interior padding in vehicles [18] and FMVSS 226 Ejection Mitigation standard which is meant to reduce the partial and complete ejection of vehicle occupants through side windows in crashes, particularly rollover crashes [19]. There are no such equivalent standards required in Australia although Australia does have very high seat belt wearing rates, which to some extent helps obviate the need for such requirements.

Australian authorities and consumer groups such as ANCAP are reluctant to implement any dynamic rollover testing procedures until a number of research issues have been resolved. The main issue is a regulatory or consumer test must reliably replicate the dynamic conditions and injury mechanisms associated with a rollover crash so that the efficacy of occupant protection systems can be repeatedly demonstrated. Many researchers (ourselves included) consider the JRS test rig using an appropriate ATD will be able to achieve this, i.e. developing a dynamic crash test rig such as the UNSW JRS and demonstrating it can reproduce rollover crashes and associated injuries with acceptable consistent repeatability. Such a successful outcome could assist designers, regulators and consumer groups in mitigating those injuries using advanced crashworthiness systems.

Currently regulators and ANCAP are open to adopting any suitable test methodology or procedure, as long as it is proven via evidence based real world data driven research and the societal benefits are worthwhile. A review of various rollover crashworthiness tests and dynamic test rigs by Chirwa *et al.* indicated the JRS is the best candidate to date [20]. For this reason the UNSW DROP research team decided to invest in the construction and implementation of the UNSW JRS rig.

UNSW JRS TEST RIG

Funding for the installation of the JRS was obtained as a result of a successful research grant application submitted to the Australian federal government's Australian Research Council's (ARC) Linkage Infrastructure Equipment Facilities (LIEF) Project grants scheme (No: LE0989476). Monash University and Industry Partner Organisations also provided funding, namely, the New South Wales (NSW) state government's Centre for Road Safety at Transport for NSW (formerly the Roads and Traffic Authority – RTA), the NSW state government's 3rd party injury insurer Motor Accident Authority (MAA), the West Australian (WA) state government's Office of Road Safety at Main Roads WA, and the US Center for Injury Research (CFIR).

Research is currently being undertaken to design dynamic tests and test protocols that would provide a more accurate assessment of a vehicle's occupant safety in a rollover crash [21, 19, 24]. Three versions of the Jordan Rollover System (JRS) are

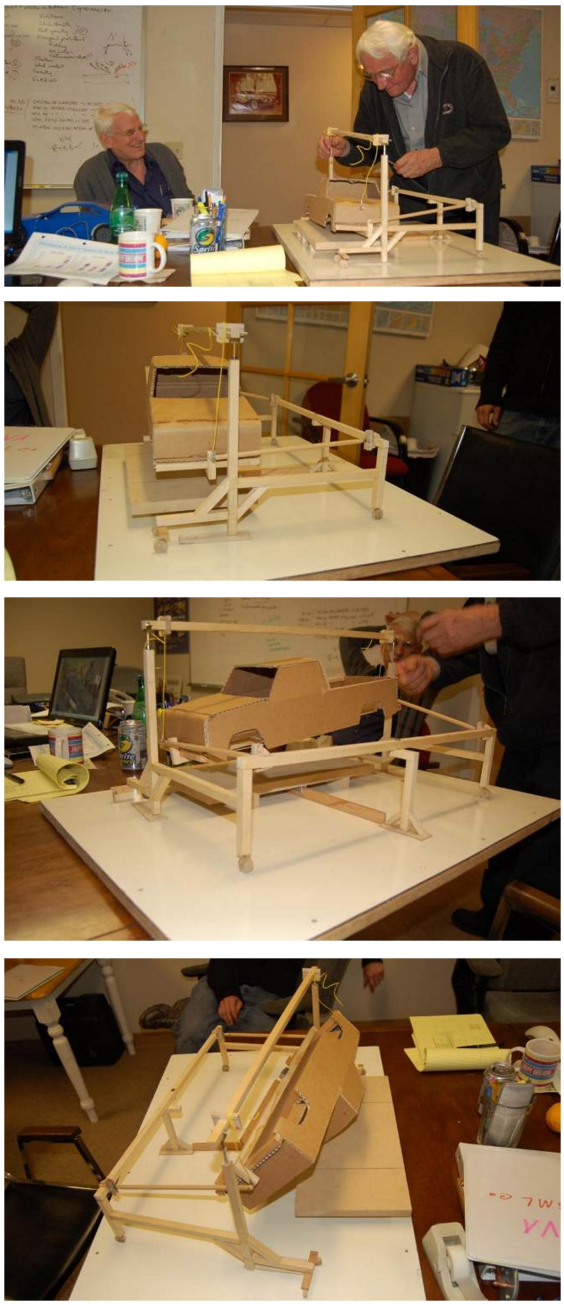

Figure 1. Concept model of UNSW JRS rig. Top frame: Dr. Carl Nash (left) from George Washington University and Acen Jordon (right).

being used at locations around the world (Center for Injury Research (CFIR) in Goleta, CA, USA; University of Virginia in Charlottesville, VA, USA; and the University of New South Wales/Crashlab® in Sydney, NSW, Australia) to study rollover and determine the feasibility of using the JRS to accurately assess a vehicle's ability to protect occupants in the real world.

The first phase of the DROP program was to construct a JRS test rig for use in Australia. Figure 1 shows a scale model and Figure 2 a concept sketch of the UNSW JRS during the design

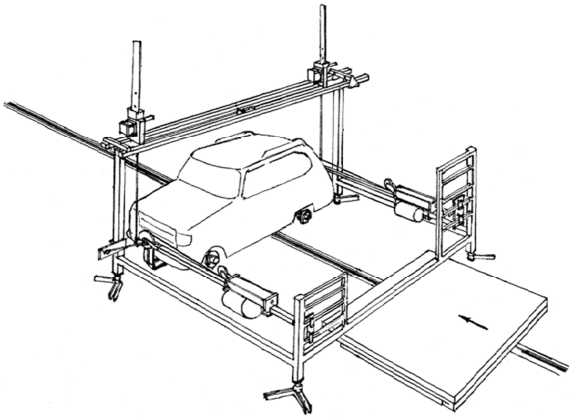

Figure 2. Drawing of Concept model of UNSW JRS rig.

phase. The rig was developed by Acen Jordan and Don Friedman from the USA. The constructed UNSW JRS that was assembled at the Crashlab® facility at Huntingwood near Sydney is shown in Figure 3. The rig was developed collaboratively by the USA designers and JRS rig manufacturers, UNSW researchers and Crashlab® test staff. The rig was then manufactured in the USA, shipped to Australia and eventually integrated into the Sydney Crashlab® facility.

The first author worked closely with the US manufacturer Safety Testing International, who designed and manufactured the rig, to ensure maximum flexibility of the rig for the commercial and regulatory crash testing environment it was going to operate in. The functionality of the UNSW JRS is different to the original CFIR JRS [21] in so far that the roadbed works independently of the roll actuator and the vehicle can be set to as much as 30-degree yaw and 15-degree pitch. The CFIR JRS roll actuator is linked via a cable to the roadbed and the pitch and yaw capacity are more limited. Moreover, the CFIR JRS rig continues to pull the roadbed through the test while the vehicle is impacting the roadbed whereas in the UNSW JRS the independent tow system is released from the roadbed just prior to impact.

Figures 3 and 4 show how the UNSW JRS attaches and suspends the vehicle via the cradle which in turn is suspended by the drop and catch assembly supported by the frame gantry. The vehicle is free to spin about its longitudinal centre of gravity axis above the track independent of the roadbed translational motion which is towed by the Crashlab® drive system. The control arms constrain the vehicle in the direction of the roadbed movement but allow vertical displacement. The roadbed is instrumented with load cells so that the vertical impact load can be measured. The vehicle

Figure 3. UNSW JRS rig assembled at Crashlab®; Top and middle: front view; bottom: side view.

can be positioned with a predetermined pitch, yaw, and drop height.

The terms near and far are used to describe the side of the vehicle that impacts the roadbed first and last, respectively. Figure 4 shows how the vehicle rolls and then drops onto the roadbed and then is caught once the roadbed passes. At the start of the

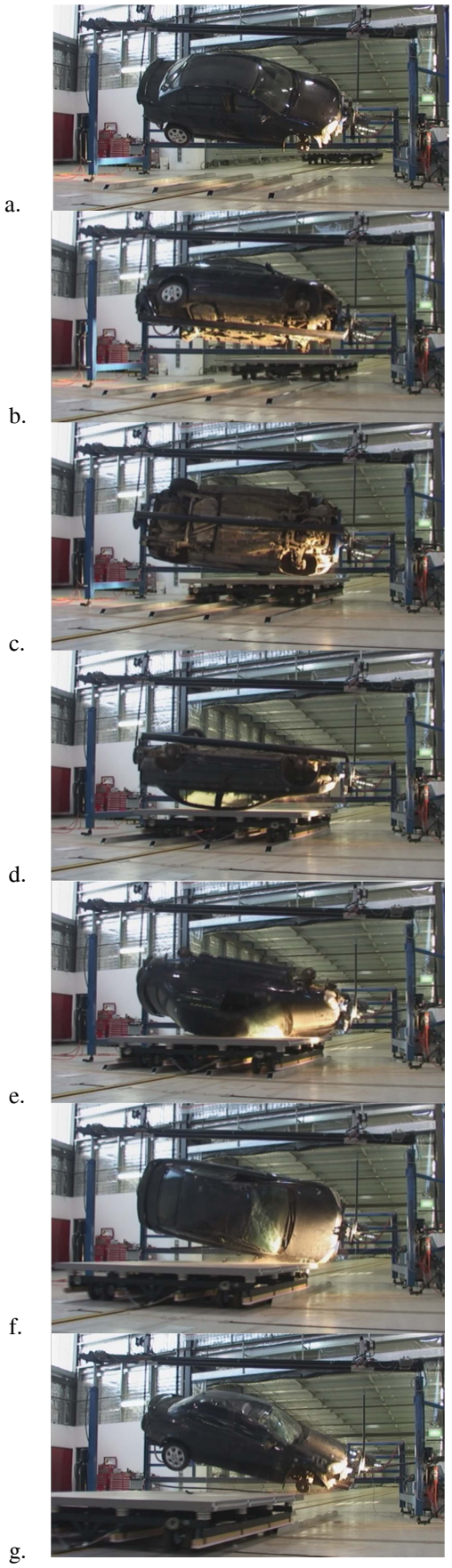

Figure 4. Roll and drop sequence as roadbed moves away under car after roll impact, for the UNSW JRS.

Pre-crash

Post-crash

Figure 5. GM Holden Astra loaded into JRS showing before and after one roll.

Pre-crash

Post-crash

Figure 6. 1998 Toyota Land Cruiser loaded into JRS; before and after one roll shown. Note roadbed under vehicle has stopped under the vehicle. (roadbed has been modified since to correct this)

test (a), when the roadbed is approaching close to the rig, the roadbed is released and the roll propulsion unit is activated such that the vehicle is rotated at a prescribed angular velocity (b & c). The roof then impacts the freely moving roadbed at the designated roll and pitch angle (d) on the near side. The vehicle then rolls on the roadbed over to its far side (e). The roadbed continues down the track and the vehicle is eventually captured so that it does not drop onto the test floor (f & g). It should be noted that the roll sequence for the UNSW JRS is a mirrored rotation process compared to how the US CFIR JRS and DROTS rigs operate. This is due to difference in driver seat position between Australian and US vehicles (left hand drive versus right hand drive vehicles, but in both cases the driver is on the impacting far side).

When the catch assembly releases the vehicle and the roll propulsion reaches the desired roll rate the vehicle can freely rotate and move vertically. Pitch can vary during the roll from the initial setting when it is released. The tow system releases the roadbed just prior to impact. When the vehicle then strikes the roadbed on the near side the roadbed is not being towed. Skate-over rails support the roadbed during the impact albeit the roadbed can skate freely through on the support rails as the vehicle continues to roll on top of it, impacting the far side. Immediately after the roadbed passes, the brakes on the catch assembly activate suspending the vehicle above the test floor. The roadbed is then slowly stopped down the track away from the suspended vehicle.

So far five vehicles have been tested in the UNSW JRS: three commissioning tests and two further training tests for improvements to test procedure and ATD measurements. Figure 5 shows a GM Holden Astra and Figure 6 a 1998 Toyota Land Cruiser both tested at 5-degree pitch, 180deg/sec roll rate, 24km/h roadbed speed, and 10-degree yaw. This is known as the Santos test protocol, named after the US Santos Foundation that sponsored a large portion of the US CFIR JRS tests [21]. The 1998 Toyota Land Cruiser's roof crush performance would be rated poor compared to other vehicles that have undergone a similar crash test.

As shown in Figure 3 the rig can be moved around on wheels and then set down and bolted to the concrete floor as indicated in Figure 7. Similarly Crashlab's tow facility was utilised to tow the roadbed. The CFIR JRS has its own roadbed propulsion system. Building a propulsion system so that the rig is self-contained would have increased costs significantly and reduced its operational flexibility within the Crashlab® facility. The highly sophisticated crash lab towing system allows for a

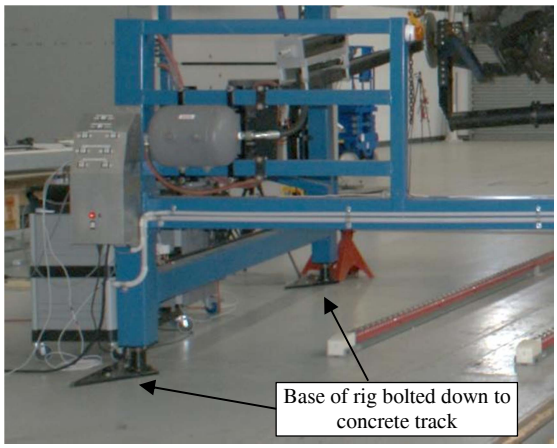

Figure 7. Feet of base of the JRS gantry frame bolted to concrete floor.

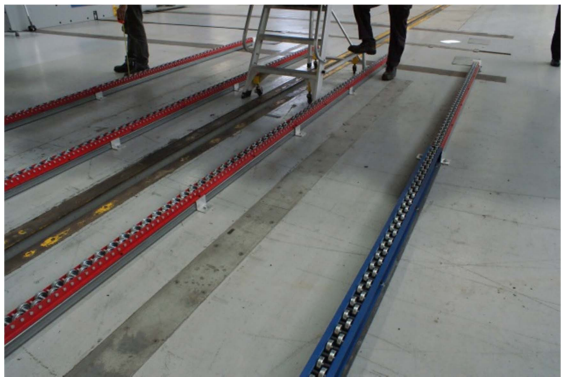

Figure 8. Roller skate tracks help reduce the friction between the roadbed and the tracks.

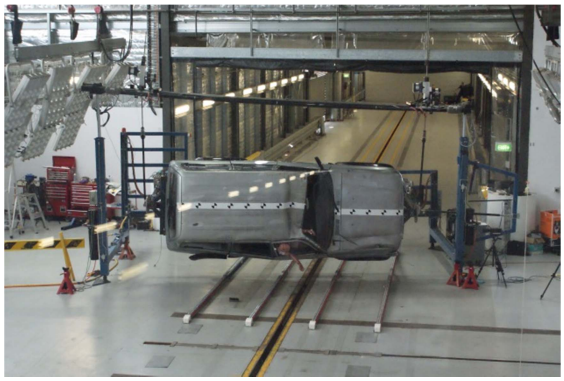

Figure 9. Second Land Cruiser test showing roadbed had passed under the vehicle after the vehicle had impact the roadbed.

better control of the roadbed speed, since it uses a computerised control system that continually checks and appropriately maintains the speed during the run.

An issue that arose was how the roadbed slid on the support rails. The images in Figure 5 show the rectangular aluminium tubing support rails fixed to the concrete test floor. The roadbed is constructed so that it runs on wheels up until the moment it reaches under the vehicle. A matching set of tubing under the roadbed then slides (skates) over the aluminium tubing fixed to the concrete track floor. This tubing also provides load bearing support for the roadbed during impact. Because the sliding coefficient of friction was around 0.19 and the mass of the roadbed was around 1160kg, the combination of a low mass roadbed and relatively high sliding friction caused the roadbed to stop under the vehicle as shown in Figure 6. To address this situation, the mass of the roadbed was increased and the aluminium tube support rails replaced with roller support rails as shown in Figure 8. A subsequent test of another Land Cruiser was run and the roadbed passed readily under the vehicle with the vehicle interacting in a manner similar to that shown in Figure 4.

Finally, it needs to be pointed out that repeated calibration runs are used to achieve synchronisation of the roadbed such that it is located immediately under the vehicle in the correct position at the moment the vehicle drops onto its near side. The roadbed once released freely moves under the vehicle and the vehicle is allowed to drop just short of the roadbed. Timing of the position of the roadbed is thus matched to the moment the near side of the vehicle is intended to impact the roadbed.

CONCLUSIONS

The following conclusions were reached:

- The UNSW JRS provides a much needed rollover test rig, to further research on vehicle rollover crashworthiness, and to help develop improved vehicle design for occupant protection in rollover.

- Observationally the rig appears to function in a manner similar to the USA CFIR JRS and University of Virginia DROTS rigs during the test in regards to the rollover crash mechanism;

- The UNSW JRS can be adapted to a commercial or government crash test facility. The rig can be easily moved from one side of the facility to the other to make way for other testing;

- The critical issue of vehicle roll impact synchronisation (timing) between the decoupled roadbed and vehicle motion (dropping and rotating) was determined via basic physics calculations and then fine-tuned via multiple calibration runs, i.e. matching up the instant the vehicle's near side was directly over the leading front side of the roadbed;

- To ensure the roadbed does not stall under the vehicle, the support rails fixed to the concrete test track over which the roadbed slides were changed to rollers. This in combination with more closely matching the roadbed mass with that of the vehicle eliminated the roadbed stalling problem.

Future work:

- It appears the test rig will be capable of repeatable tests; however this has yet to be assessed. Moreover , detailed comparisons of test results such as deformation, roadbed loads, roll rate, etc. has yet to be carried out to assess repeatability comparisons between the three rigs at Sydney, Goleta and Charlottesville;

- The ability of the UNSW JRS to replicate real world rollover crashes may subject the test rig to significantly more severe loads than it has to date been subjected to and/or designed for. This will be explored through computer simulation using LSDYNA to first to assess what the loads may be and then strengthen the rig to tolerate the higher loads;

- An extended rollover test and research program will be developed, utilising the UNSW JRS, aimed at better replicating real world rollover injury mechanisms, and vehicle design injury mitigation.

ACKNOWLEDGEMENTS

The authors would like to thank the Australian federal government's Australian Research Council for providing funds to carry out this research through the LIEF Project grants scheme (No: LE0989476). The generous funding and in-kind contributions by Monash University and the industry Partner Organisations for provide funding is greatly appreciated, namely, the New South Wales (NSW) state government's Centre for Road Safety at Transport for NSW (formerly the Roads and Traffic Authority – RTA), the NSW state government's 3rd party insurer Motor Accident Authority (MAA), the West Australian (WA) state government's Office of Road Safety at Main Roads WA, and the US Center for Injury Research (CFIR).

The authors would also like to thank Acen Jordan from Jordan & Co, and Josh Jeminez, Susie Bozzini from Safety Testing International and Don Friedman from the US Center for Injury Research, for their valuable contributions and assistance with the conceptual design, manufacture and installation of the UNSW JRS and the staff at Roads and Maritime Services Crashlab® for their generous assistance during installation and ongoing rig development.

REFERENCES

[1] Grzebieta R, Bambach M, McIntosh AS, Mattos G, Simmons K, Rechnitzer G, Digges K., (2013). *Replicating Real World Rollover Crash Injuries*, Proc. 23rd International Technical Conference on the Enhanced Safety of Vehicles, Seoul, Korea.

[2] Grzebieta R., Bambach M., McIntosh A.S., Digges K., Job S., Friedman D., Simmons K., Chirwa C., Zou R., Pintar F. and Mattos G., (2012). *The Dynamic Rollover Protection (DROP) Research Program*, in Proceedings of the International Crashworthiness Conference ICRASH 2012, July, 18-20, Milan, Italy.

[3] United Nations, (2008). *Electronic Stability Control Systems*, Global technical regulation No. 8, ECE/TRANS/180/Add.8, Geneva.

[4] Australian Government, (2010). *Vehicle Standard (Australian Design Rule 31/02 – Brake Systems for Passenger Cars) 2009*, http://www.comlaw.gov.au/Details/F2010C00151

[5] Insurance Institute For Highway Safety, *Procedures for rating roof strength*. http://www.iihs.org/ratings/roof/information.html

[6] ANCAP, (2012). A*NCAP Rating Road Map 2011-2017*. http://www.ancap.com.au/admin/uploadfiles/RoadMap2017.pdf

[7] Brumbelow M.L., Teoh E.R., Zuby D.S., and A.T. McCartt, (2009). *Roof strength and injury risk in rollover crashes*, Traffic Inj. Prev. 10, pp. 252-265.

[8] Brumbelow M.L. and Teoh E.R., (2009). *Roof strength and injury risk in rollover crashes of passenger cars*, Traffic Inj. Prev. 10, pp. 584-592.

[9] Young, D., (2010). PhD Thesis, *Protecting Occupants During Passenger Vehicle Rollover Crashes*, Dept. of Civil Engineering, Monash University.

[10] Grzebieta R.H., Bambach M., McIntosh A.S., (2010). *How Stronger Roofs Prevent Diving Injuries In Rollover Crashes*, Proc. 7th Int. Crashworthiness Conf. ICRASH 2010, ed. Chirwa E.C. and S. Kan, Washington DC.

[11] Grzebieta R.H., Young D., Bambach M., McIntosh A., (2007). *Rollover Crashes: Diving Versus Roof Crush*, Proc. 20th International Technical Conference on the Enhanced Safety of Vehicles, Lyon, France.

[12] Mandell, S.P., Kaufman R., Mack C.D., and Bulger E.M., (2010). *Mortality and injury patterns associated with roof crush in rollover crashes*, Accident Analysis & Prevention, 42 (4): pp. 1326-1331.

[13] Strashny, A., (2007). *The Role of Vertical Roof Intrusion and Post-Crash Headroom in Predicting Roof Contact Injuries to the Head, Neck, or Face During FMVSS No.216 Rollovers; An Updated Analysis*, DOT, Editor 2007, National Highway Traffic Safety Administration: Washington DC.

[14] Young D.P. and Grzebieta R.H., (2010). *Vehicle roof strength as it relates to contained occupant injury prevention during rollover crashes*, Proc. Australasian Road Safety Research, Policing and Education Conference, Canberra, Australia.

[15] Mattos G.A., Grzebieta R.H., Bambach M.R. and McIntosh A.S., (2012). *Head Injuries to Restrained Occupants in Single-Vehicle Rollover Only Crashes*, Traffic Injury Prevention, in press, DOI:10.1080/15389588.2012.722735.

[16] Bambach M.R., Grzebieta R.H., McIntosh A.S., Mattos G.A., (2012). *Cervical and thoracic spine injury from interactions with vehicle roofs in pure rollover crashes*, Accident Analysis and Prevention, vol. 50, pp.34– 43.

[17] Bambach M.R., Grzebieta R.H., McIntosh A.S., (2012). *Thoracic injuries to contained and restrained occupants in single-vehicle pure rollover crashes*, Accident Analysis and Prevention, Volume 50, January 2013, pp. 115-121.

[18] US Department of Transportaion, National Highway Traffic Safety Administration, (1989). *Laboratory Test Procedure for FMVSS 201, Occupant Protection in Interior Impact*, Office of Vehicle Safety Compliance, Washington DC.

[19] National Highway Traffic Safety Administration, (2012). *Standard No. 226; Ejection Mitigation*, Code of Federal Regulations, Section 571.226, Washington DC.

[20] Chirwa EC, Stephenson RR, Batzer SA, & Grzebieta R H, (2010). *Review of the Jordan Rollover System (JRS) vis-a-vis other dynamic crash test devices*, International Journal of Crashworthiness, 15(5), 553-569.

[21] Friedman D and Grzebieta RH, (2009). *A Proposed Rollover and Comprehensive Rating System*, Proc. 21st International Technical Conference on the Enhanced Safety of Vehicles, Stuttgart, Germany, Paper Number 09-0515.

[22] Grzebieta R, McIntosh A, Bambach M, and Young D, (2010). *Dynamic Test Protocol to Assess Rollover Crashworthiness*, Proc. Australasian Road Safety Research, Policing and Education Conference, Canberra, Australia.

[24] Kerrigan J, Jordan A, Parent D, Zhang Q, Funk J, Dennis NJ, Overby B, Bolton J, Crandall J, (2011). *Design of a Dynamic Rollover Test System*, SAE Int. J. Passeng. Cars – Mech. Syst. 4(1):870-903, 2011, doi:10.4271/2011-01-1116.