Electronic Stability Test through a FCEV Simulation Model Development

Dongsun, kim
Hongryeol, Kim
Wise-Automotive (1)
Korea Republic
Xuefeng, Jin
Seoul National Univ. (2)
Korea Republic
Paper Number 13-0265

ABSTRACT

In this paper, we propose assessment methodology of Electrical Stability for HFCV and EV (Electronic Vehicle) through a Simulation Model Development. The purpose of the simulation is to simulate the situations where insulation failure leads to leakage current and voltage rise.
The allowance of the symptoms in the view of human safety also can be assessed through the simulation. Through the simulation, high voltage system of the HFCV and EV can assessed considering electrical accidents.
The assessment of the high voltage system of HFCV and EV is achieved through the simulation. And also we can supplement high voltage system design by the results of the simulation.

INTRODUTION

The safety regulation is intended for protection of passengers and environment from the automobile industry.
The objective of this paper is to establish a technique for safety assessment and amend safety standards for HFCV and consequently reflect research results to vehicle management policy.
Development of techniques for safety assessment of Hydrogen Fuel Cell Vehicle(HFCV) includes four tasks, research for regulation system and policy, hydrogen safety, vehicle operation safety and protection against high-voltage.
In this paper, modeling the phenomenon of accidents that can occur with hydrogen fuel cells and electric vehicles is performed for electrical accident simulation.
To establish the electrical accident simulation, mathematical models that can represent the electrical system are invented and the models are composed of parameters of equivalent circuit.
For the measurement of the parameters, probe is also developed.
From the results of the simulation, Analysis of the risk that may occur when a high voltage accident presents is performed and proper methods for reducing the risks are proposed.

Modeling & Simulation

In this paper, the mathematic models of electrical system for HFCV and EV are established through a theoretical analysis of parameters and the real load measurement through a reference based R, L, C circuit for the modeling

Theoretical analysis & Charge and repair Simulation The Figure 1 describes simplified circuit of power converter and AC power supply for HFCV on the left side. On the left side, automobile isolation and ground model prepared for charging and repair situation.

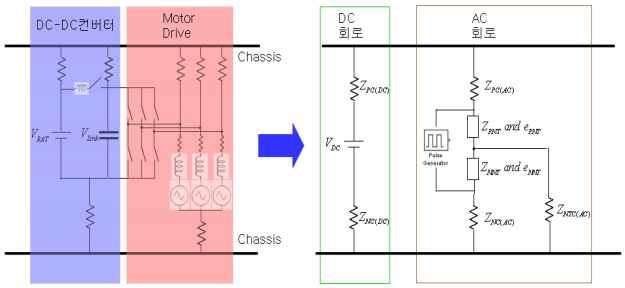

Figure1. Power converter and simplified of AC model

If switches turn on, DC power connected circuit is changed to AC circuit, switch is modeled to pulse generator and 3 phase load is changed to two load equivalents to connect neutral point. And Completely separated DC circuit is equivalent to DC circuit.

Z_{PC}:(+)socket, Isolation Resister between chassis
Z_{NC}:(−)socket, Isolation Resister between chassis
Z_{NTC}:Motor neutral point, Isolation Resister between chassis
Z_{PNT} and e_{PNT}: (+)socket, load between neutral point and counter electromotive force

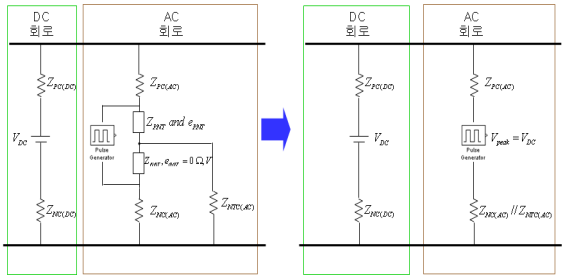

Figure 2. AC equivalent circuit model

AC circuit model was simplified through an equivalent circuit re-analysis about AC circuit. AC circuit and DC circuit was division according to simplify modeling.
So, we can simulation about the isolation standard suitability and danger situations through ELSA regulation analysis of each isolation standard.
DC circuit case is applied to the 100Ω/V =10mA, 500 Ω/V=2mA isolation standard.

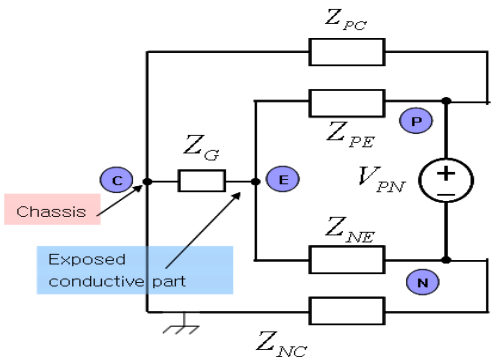

Figure 3. Isolation and ground model for automobile

The equation was derived from the about isolation and ground model for automobile.
Between high voltage (+) / (-) socket instead of the chassis/ exposed conductive isolation resistance, the between chassis and exposed conductor instead of the ground resister was modeling
The current equation is derive to using a mesh current analysis.

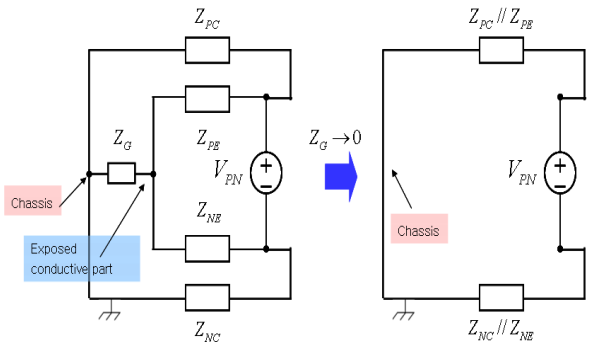

Figure 4. Circuit Analysis model vehicles isolation and grounding

We can know that, if the proposal model for the automobile isolation and ground equation is equipotential, it is like a proposal isolation model of ELSA regulation.

$V_1, V_2, \ldots V_N$: Exposed conductor electric potentials
$R_1, R_2, \ldots R_N$: Exposed conductor–chassis ground resistance
R_{eq}: Exposed conductor–chassis ground equivalent resistance
Z_H: Human impedance

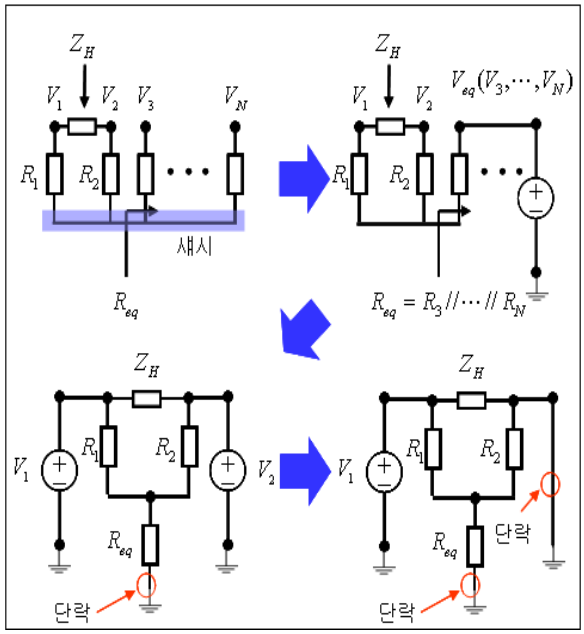

Figure 5.Analyze the human contact between the exposed conductor

We do analysis of Human contact about the between exposed conductor. Like a figure 5 derive about the Parallel equivalent resistance between the human and ground, and it is like a below equation.

$$[1]\ R_{eq} = 0, \quad R_1 = 0.1\,\Omega, \quad R_2 = 0.1\,\Omega$$
$$R_{GH} = 500\ \Omega // 0.1\,\Omega$$

$$[2]\ R_{eq} \to \infty, \quad R_1 = 0.1\,\Omega, \quad R_2 = 0.1\,\Omega$$
$$R_{GH} = 500\ \Omega // \{0.1\,\Omega + 0.1\Omega\}$$

Ground risk according to the change in resistance equivalent expression as analyzed below.
the Equivalent resistance of the parallel between human is satisfied because of the parallel resistance is 500 Ω and 0.1 Ω in the case of equation (1).
But equation (2) of case, low 500Ω and 0.2Ω
But equation (2) of case, we can get the conclusion should be less than 500Ω and 0.2Ω.

<u>Computational analysis for crash simulation model for the isolation and grounding</u>

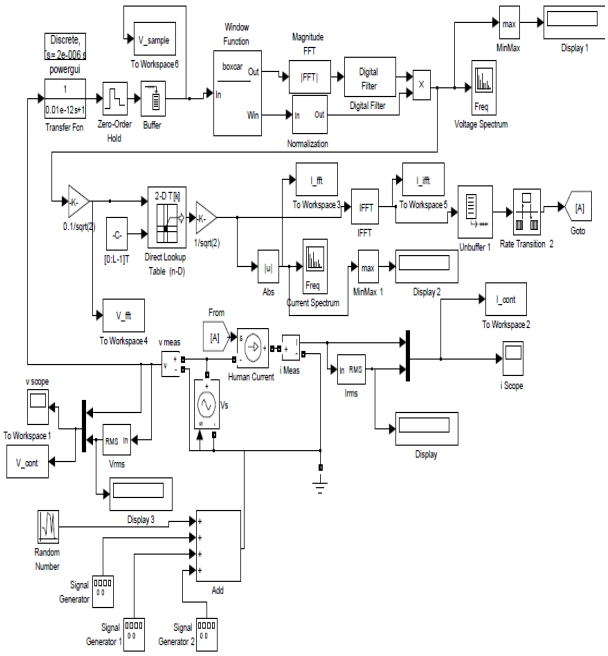

Figure 6. Body simulation model diagram

Simulation using Simulink simulation model is shown in Figure6. Human body models using the Simulink model
Was observed using the human body as the input voltage, the voltage and the corresponding current

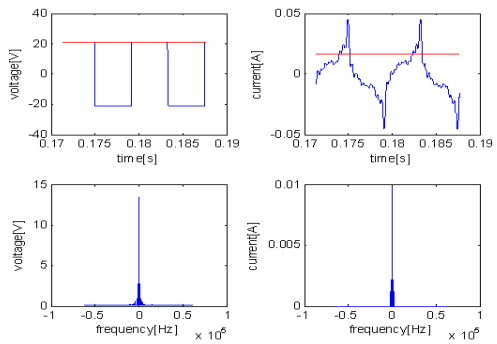

Figure 7. Human simulation results

Figure 7 is show the result about a time-domain and frequency domain on the voltage and current test. Pulse signal is used to input. Measurement during from 0.17 time[s] to 0.19 time[s]
Current measurement result human is among the RC filter, so voltage base frequency is have a high effect to human.
We can know that pulse wave have a current respond RMS is bigger than same amplitude sine wave.
Simulation situation setting for compare importance from automobile isolation resistance value and balance, measurement to isolation resistance effect to human current
Case 1 is show the human current sensitivity analyser result according to different of isolation resistor when the isolation resister change value

Case 2 is show the human current sensitivity analyser result according to when the isolation resister change value.
Simulation setting is input voltage 500V, minimum isolation ((0.05Ω/V)*(500V)=25Ω), ground (0.1Ω)is parallel connect to human, max human current is 2mA.

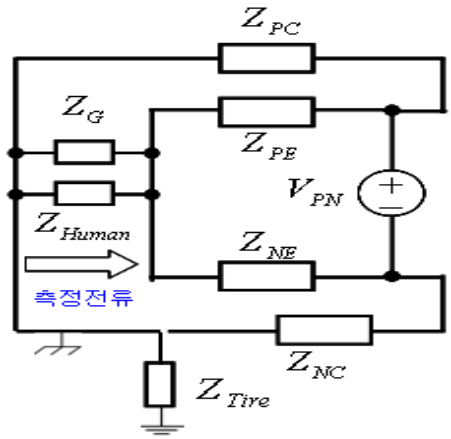

Figure 8.Isolated ground circuit simulation settings

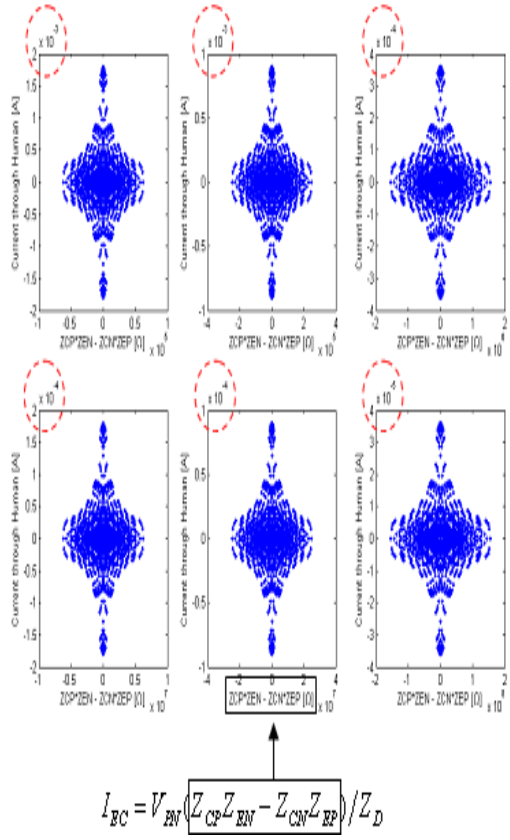

Figure 9. Isolated ground circuit simulation results (case1)

Case 1 is show the simulation result of maximum human current is decrease when increase the minimum isolation resister value. Maximum human current is 2mA.

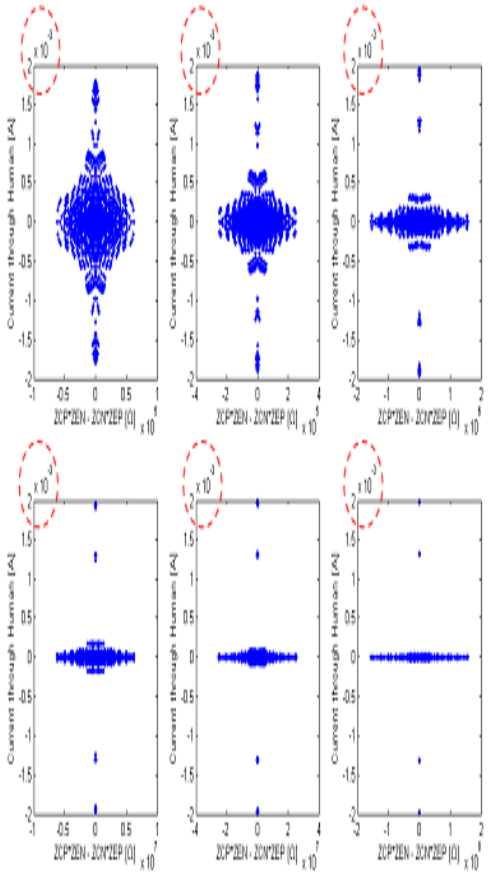

Figure 10.Isolated ground circuit simulation results (case2)

May change, the minimum isolation resistance size fixed during the isolation resistance of different simulation results of Case 2 was negligible change, the maximum human current was 2mA .
Simulation error is appear to less than 0.5mA from base 2mA current, and equipotential grounding is not 0.1Ω.
There is a circuit analysis by equipotential compensation correction.

<u>EV Charger system simulation</u> Provides an environment that makes it possible to simulate the physical environment of the charging system using the configuration of the equivalent circuit through modeling and evaluated to topics on electrical stability.

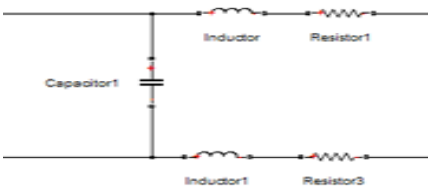

Figure 11. Cable model diagram

Modeling was carried out as shown in the figure on the charging cable.

Modeling was composition to the cable parasitic resistance and parasitic impedance of the charge cable. To the definition of the relation between the model specification and parameter charge cable

$$\frac{l}{2\pi}\text{arcosh}\left(\frac{d}{a}\right)$$

We calculated the inductance of the wire to wall model using the above equation.

$$※\ \text{Wire to wire capacitance} = \frac{\pi\varepsilon l}{\text{arcosh}\left(\frac{d}{2a}\right)} = \frac{\pi\varepsilon l}{\ln\left(\frac{d}{2a}+\sqrt{\frac{d^2}{4a^2}-1}\right)}$$

$$※\ \text{Wire to ground capacitance} = \frac{2\pi\varepsilon l}{\text{arcosh}\left(\frac{d}{a}\right)} = \frac{2\pi\varepsilon l}{\ln\left(\frac{d}{a}+\sqrt{\frac{d^2}{a^2}-1}\right)}$$

The above equation is the equation of parasitic capacitance and parasitic resistance component that occurs between the wire to ground and the wire to wire.
Parameter of Wire is extracted through a comparison of the measured value and the theoretical value.

Table 1. Charger cable parameter

		Value
DC Charger cable	Inductance [uH]	0.59
	Capacitance [pF]	99
	Resistor [mΩ]	1.8
AC Charger cable	Inductance [uH]	3.94
	Capacitance [pF]	344
	Resistor [mΩ]	80

Battery modeling component is modeled as follows.

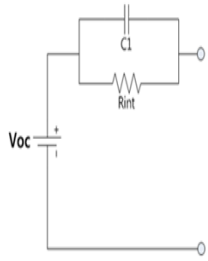

기호	정의
V_{OC}	Open Circuit Voltage
C_1	Battery Internal Capacitance
R_{int}	Battery Internal Resistance

Figure 12. Cable model diagram

VoC, Rint, C1 is changed in accordance with the (State of Charge) SOC.
Internal Capacitance to extract the value for which to extract the value Internal resistance during charging, to represent the state Transient.
Derivation of the battery modeling parameter, the measurement results were used to the internal resistance and the internal capacitor.
Method for measuring the internal resistance, we have to calculate the internal resistance to measure

the difference between Vb and Voc in Switch on / off.

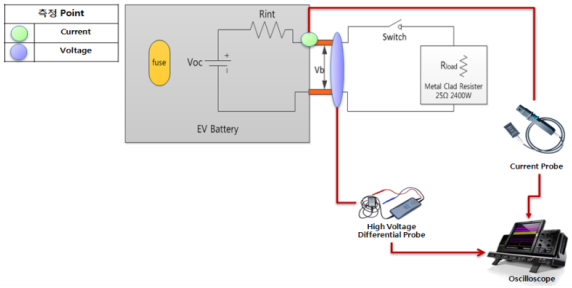

Figure 13. Internal resistance measurement

$$V_b = V_{oc} \frac{R_{load}}{R_{int} + R_{load}}$$

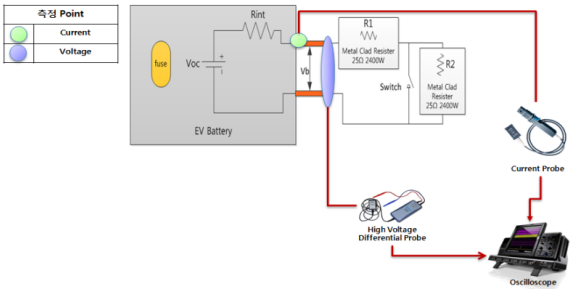

Figure 14.Internal capacitor measurement

$$0.63\tau = (R_1 + R_{int})C_1$$

Table 2.The following table is a result of the internal resistance and the internal capacitor measured by the state of SOC.

SOC	Vb [V]	Voc [V]	Rint 결과 [Ω]
10%	332.9	334.3	0.1051
30%	347.5	348.2	0.0504
50%	357.8	359	0.0838
70%	377.4	378.6	0.0795
90%	380	387	0.4605

SOC	Rint [Ω]	R1 [Ω]	τ [sec]	C1 [F]
10%	0.1051	25	0.0209742	526.34 μ
90%	0.4605	25	0.0212520	525.86 μ

In the end, L,C,R was represented by an equivalent circuit the output impedance (Z0) of the charger.
Z0 is determined by the Output Filter circuit and the output stage of the DC / DC converter.

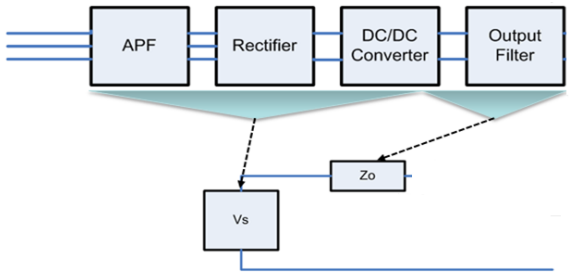

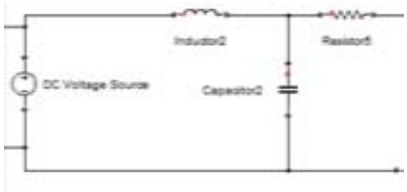

Figure 15. Charger model diagram

The above-mentioned equivalent circuit model was modeled charger.
The charger's output parameter was measured by production output impedance measuring device as shown in the figure below.

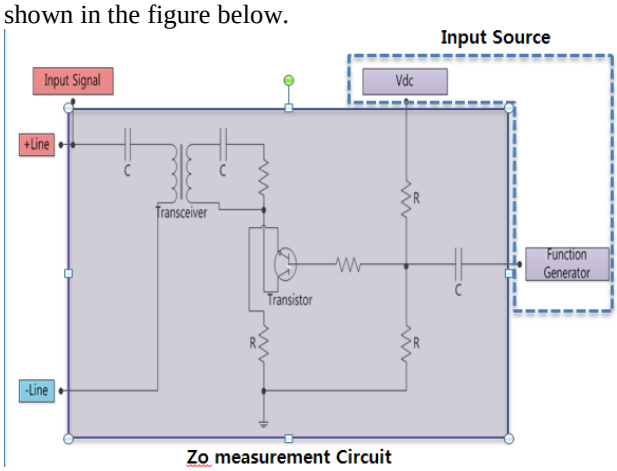

Figure 16. Zo measurement probe circuit

Consists of a function generator Vdc (voltage dc), the components, Input Source provides a source required to generate a signal of Z0 Measurement circuit.
Z0 Measurement Circuit to generate Output signal to be applied to the measurement object.
After the Output Signal is applied to the object to be measured, Input Signal to measure the current (Io) and the voltage comes back (Vtest).
Using modeling as described above, I have implemented a simulation as follows.

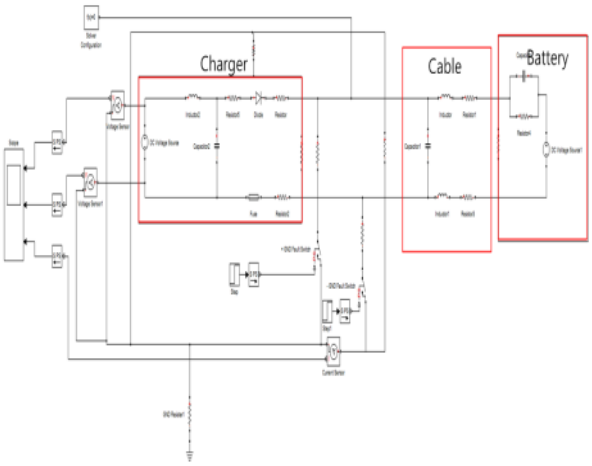

Figure 17.EV charger system model diagram

<u>Computational analysis for Fault DC EV Charger system simulation</u> simulated DC charger system according to the state of SOC

charging.

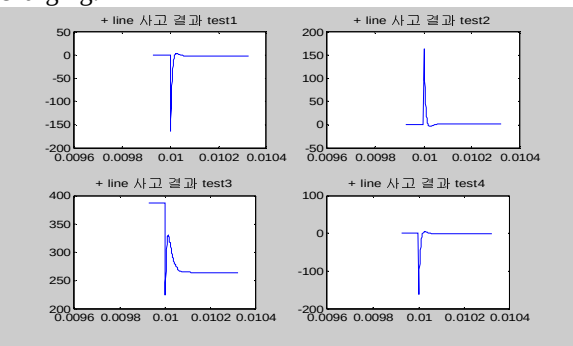

Figure 18. Is + line ground fault simulation results of SOC90%

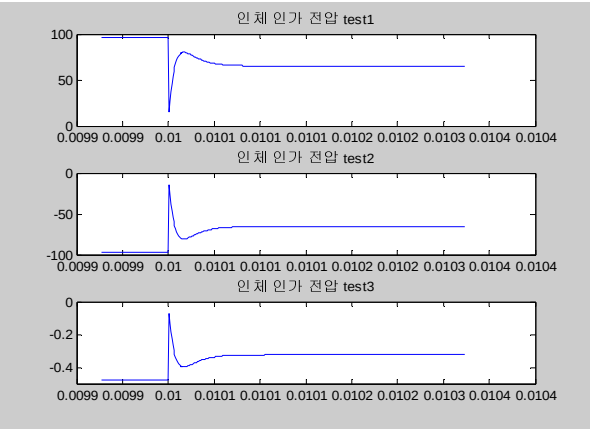

Figure 19. As a result of the applied voltage human body

Simulation results I it is possible to see the results of the voltage applied to the human body, ensure completion point on how to deal with the accident during charging through the results.

CONCLUSION

A quantitative analysis of the risk of electric shock element and associated parameters that can occur is the same as the results of analysis at the time of collision are separated and analyzed ground during the charging and maintenance.
Conditions and maintenance charging status and the collision energy range of delivery and current range gives the injury to the human body, and consider the constant regardless of external factors, the other, this is the analysis derived that can be easily .
action is required the necessary electronic box is deleted or the mechanic, high voltage unit is removed the car enters the repair station or charger station to make a repair, the possible exposure of the conductive parts high voltage by this or the charger was confirmed in a situation where an increase, the need for this safety.
If you want to remove the power supply of the vehicle at the time of development, and to comply with the safety maintenance is to wear isolation device, in most cases, the risk of electric shock by maintaining the charge and has not increased significantly
Charging and maintenance facilities for vehicles and earth (ground) to facilities, equipment, and maintenance of the electric shock caused by contact with high-voltage part can be prevented.

REFERENCE

[1] Hydrogen Fuel Cell Vehicle GTR Action Plan, 2007. 5, UN/ECE/WP 29-141-19
[2] National hydrogen Energy Roadmap, 2002. 11, United States Department of Energy
[3] FreedomCAR and Fuel Partnership Plan, 2006. 3, United States Department of Energy
[4] National Hydrogen and Fuel Cell Technology Innovation Programme, 5. 2006, Federal Ministry of Transport, Building and Urban Affairs
[5] Vehicle Safety Rulemaking and Supporting Research Priorities, 1. 2005, NHTSA
[6] The Newest Codes and Standards for Hydrogen and Fuel Cells, 11. 2006, National Hydrogen Association
[7] Hydrogen Posture Plan. 2004. 3 DOE
[8] Fuel Cell System Explained. 2003
[9] Applications of Fuel Cells in Vehicle(SP-2098). 2007. SAE
[10] Fire Safety(SP-2097). 2007. SAE
[11] March 18, 2003 Fuel Cell Vehicles Connecticut Fuel Cell Investment Summit
[12] Fuel Cell Vehicles: Technology, Market, and Policy Issues John M. DeCicco SAE Research Report RR-010 Society of Automotive Engineers, November 2001
[13] Hydrogen Fuel ¡ª Product Specification ¡ª Part 2: PEM fuel cell applications for road vehicles
[14] EVS-20 Links Presented by Long Beach, CA November 18, 2003 Natural Resources Defense Council Roland J. Hwang, Senior Policy Analyst Technological Innovation: Hybrid Electric And Fuel Cell Vehicle Hybrid and Zero-Emission Vehicle Technology
[15] Status of SAE FCV Committee Activities DEVELOPING STANDARDS FOR HYDROGEN AND FUEL CELL VEHICLES (FCVs) Glenn W. Scheffler Chairman, SAE Safety Working Group November 2007
[16] Safety issues regarding fuel cell vehicles and hydrogen fueled vehicles
[17] Status of SAE FCV Safety Working Group Activities Developing Systems-level Performance-based Standards for Hydrogen and Fuel Cell Vehicles (FCVs)
[18] Draft Action Plan to develop Hydrogen / Fuel Cell GTR(s)
[19] Survey Of Standards And Regulations For Fuel Cell Applications In The Transport Sector