A CONSIDERATION ON THE AE-MDB FOR THE SIDE IMPACT TEST IN KNCAP

Jaemoon Lim
Daeduk College
Korea
Hyungjin Chang
Gyuhyun Kim
Jaewan Lee
Korea Automobile Testing & Research Institute (KATRI)
Korea
Paper Number 13-0443

ABSTRACT

The data on car to car side impacts in Korea had increased every year from 67,105 cases in 2006 to 76,556 cases in 2011 by the Police Agency in Korea. In Korea, sales of mid-sized cars, large-sized cars and SUVs have increased since 2001. The ratio of vehicles over 1,400 kg represented 56 % in 2010. The current test procedure for side impact in KNCAP uses 950 kg MDB. The current test method may not reflect the real world traffic conditions and vehicle populations in Korea.
The study for improving the side impact test in KNCAP has been carried out. This study shows the test results of three size of vehicles (compact car, mid-sized car and large-sized car) using the current KNCAP MDB, 1,300 kg AE-MDB and 1,500 kg AE-MDB. The ES-2 dummy is mounted on the driver's and front passenger's seat, and the SID-2 5 %tile female dummy is mounted on the rear left passenger's seat.
Adopting the side airbag and the curtain airbag, the injury values and the star ratings of cars were not showed a big difference according to the size of cars.
The dominant factor affecting the occupant safety when using the AE-MDB was pelvis injury of the dummy in the rear seat. The deformations of vehicle side structure showed big difference depending on using the current KNCAP MDB or AE-MDB.
If the AE-MDB will be adopted in the KNCAP, the assessment method will be prepared for the enhancement of safety for the smaller occupant in rear seats.

INTRODUCTION

The Korean New Car Assessment Program (KNCAP), administered by the Ministry of Land, Transport and Maritime Affairs (MLTM), works to provide consumers with information on the car safety by evaluating the crashworthiness to reduce the occupant injuries and promote the manufacture of safer cars.
The side impact test procedure has been adopted in the KNCAP since 2003. Considering the traffic circumstances in Korea, the test procedure of the EuroNCAP was adopted. However, the impact speed of the KNCAP is slightly higher than that of the EuroNCAP. In the KNCAP, the driver's door side of the vehicle is impacted by the moving deformable barrier (MDB) at the speed of 55 kph [1]. The adoption of the side impact test method in the KNCAP has been contributed to the improvement of the vehicle side structure and the enhancement of the occupant protection.
The data on car to car side impacts in Korea had increased every year from 67,105 cases in 2006 to 76,556 cases in 2011 by the Police Agency in Korea [2]. 855 dead and 125,327 injured by the side crash were reported in 2011 [2].
In Korea, sales of mid-sized cars, large-sized cars and SUVs have increased since 2001. The ratio of vehicles over 1,400 kg represented 56 % in 2010 [3]. The current test procedure for side impact uses 950 kg MDB. The current MDB of the KNCAP would not reflect the real world side crashes. When SUVs impact passenger cars, the safety of passenger cars are expected to be degrade.
The EEVC Working Group 13 has performed studies to improve the MDB for the side crash and developed the Advanced European Mobile Deformable Barrier (AE-MDB) [4]. The weight of originally developed AE-MDB was 1,500 kg. Recently, the 1,300 kg AE-MDB was newly developed.
The study for improving the side impact test in KNCAP has been carried out [3]. It was compared which MDB was appropriate for the current traffic conditions and vehicle populations. Also, it was investigated whether the smaller occupant in the rear seat would be secured or not under the side impact crashes.
Three size of vehicles (compact car, mid-sized car and large-sized car) were tested how to improve the side impact test of the KNCAP. The results using the current KNCAP MDB and two types of AE-MDB were represented and compared.

KNCAP SIDE IMPACT TEST METHOD

The side impact test is conducted as shown in Figure 1, where a moving barrier impacts a car containing ES-2 dummy on the driver's seat at a speed of 55kph. This is 5kph faster than the official speed of 50kph.

This test mimics a situation where a car hits the side of another car at a perpendicular angle.

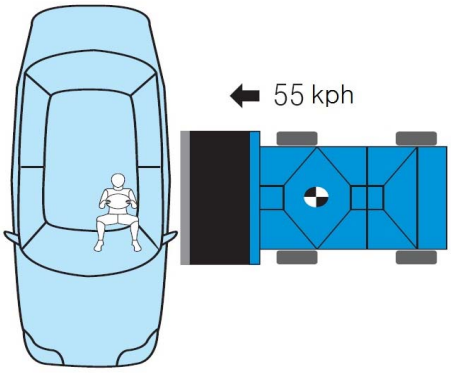

Figure 1. Schematic diagram of the side impact test.

The injury rate totals 16 points by adding injury values of the crash dummy's head, chest, abdomen and pelvis as shown Table 1. Points on each body part can be induced by interpolation from injury values. Point deduction can be made by subtracting points of back plate load Fy and chest T12 load and moments as shown in Table 2. Deduction cannot be more than 2 points. A bigger point of chest T12 load or moment will be deducted.

Table 1.
Assessment method for the side impact test.

	Injury	Criteria	Points	Injury Risk (AIS3)
Head	HIC36	650 - 1000	0 - 4	5 - 20 (%)
Chest	Compression	22 - 42 (mm)	0 - 4	5 - 30 (%)
	Viscous Criterion	0.32 - 1.0 (m/s)		5 - 50 (%)
Abdomen	Abdominal Forces	1.0 - 2.5 (kN)	0 - 4	-
Pelvis	Lateral Acceleration	3.0 - 6.0 (kN)	0 - 4	-
Injury Rating	★★★★★	13.00 - 16.00 Points		
	★★★★	9.00 - 12.99 Points		
	★★★	5.00 - 8.99 Points		
	★★	2.00 - 4.99 Points		
	★	0.00 - 1.99 Points		

Table 2.
Side-impact modifiers

	Injury	Criteria	Points
Backplate	Fy	1.0 - 4.0kN	0 - 2
T12	Fy	1.5 - 2.0kN	0 - 2
	Mx	150 - 200Nm	0 - 2

As shown in Figure 2, the impactor consists of 6 single blocks of aluminum honeycomb, which have been processed in order to give a progressively increasing level of force with increasing deflection.

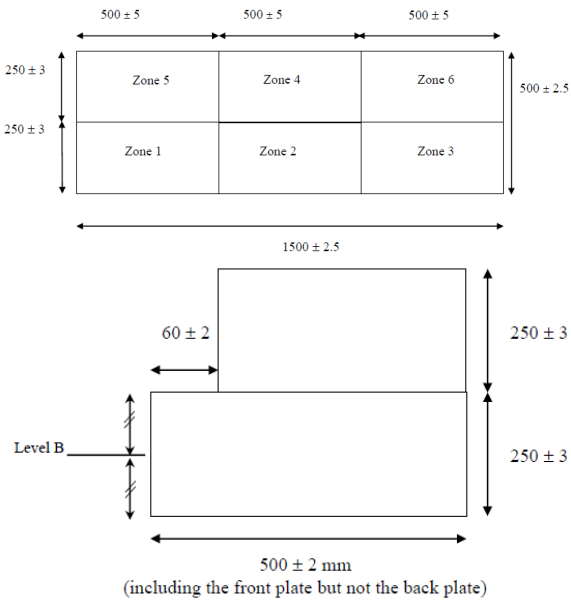

Figure 2. Features and specifications of the aluminum honeycomb of KNCAP.

SIDE IMPACT TEST METHOD USING AE-MDB

The side impact test method using the AE-MDB is represented in Figure 3. The ES-2 dummy is mounted on the driver's and front passenger's seat, and the SID-2 5 %tile female dummy is mounted on the rear left passenger's seat. The method of KNCAP was used for the assessment of the ES-2 dummy. The method of USNCAP was used for the assessment of the SID-2 dummy.

As shown in Figure 4, the impact position of the struck vehicle was moved 250 mm to the backward longitudinal direction based on the R-point of the driver's seat according to the center line of the AE-MDB.

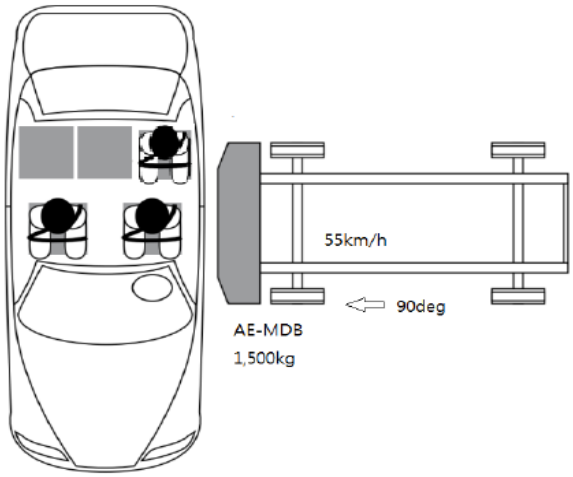

Figure 3. Schematic diagram of the side impact test using AE-MDB.

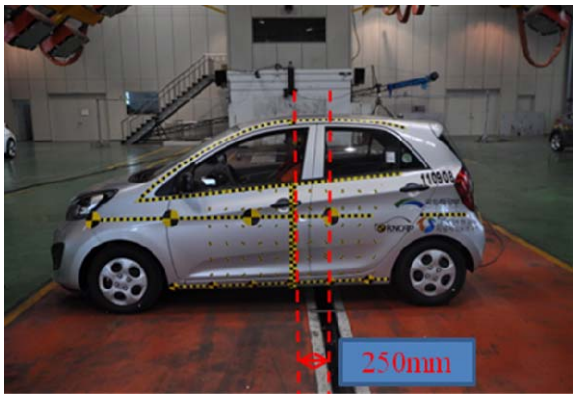

Figure 4. Impact position of struck vehicle using AE-MDB.

The features and specifications of the AE-MDB are represented in Figure 5. Two types of AE-MDB were used and the weights were 1,300 kg and 1,500 kg respectively.

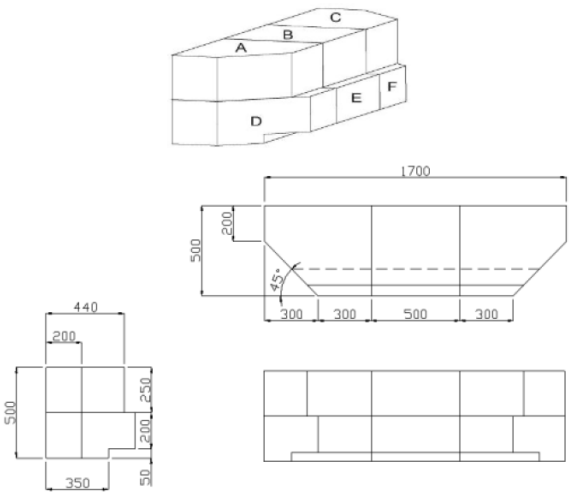

Figure 5. Features and specifications of AE-MDB.

RESULTS AND DISCUSSIONS

Results of Driver Seat Dummy

The test results and the star ratings of each vehicle are represented in Table 3 to Table 5. Side airbags and curtain airbags were mounted in all tested cars. The head injury (HIC36) increased depending on the weight of MDB. In the case of compact car, the chest compression increased depending on the weight of MDB. The trends of chest compression for the mid-sized car and large-sized car were not similar to the compact car. Increasing the weight of MDB, the safety of smaller passenger cars may decrease. Larger passenger cars may not be affected according to the increase of MDB weight. As shown in Table 3 to Table 5, all tested cars got five stars. Despite of weight increase of MDB, the good ratings reflected the effect of the side airbag and curtain airbag under side crashes. The side airbags and the curtain airbags could reduce the ES-2 dummy injuries by not contacting the dummy with the vehicle interior.

Table 3.
Test results and star ratings of compact car.

Body	Injury	Weight of MDB		
		950kg	1,300kg	1,500kg
Head	HIC36	74	238	461
Chest	Compression (mm)	15.2	21.1	23.0
	V/C (m/s)	0.12	0.19	0.26
Abdomen	Forces (kN)	0.54	0.79	0.82
Pelvis	Forces (kN)	1.55	1.62	1.69
Star Rating (Sum of points)		★★★★★ (16.0)	★★★★★ (16.0)	★★★★★ (15.8)

Table 4.
Test results and star ratings of mid-sized car.

Body	Injury	Weight of MDB		
		950kg	1,300kg	1,500kg
Head	HIC36	43	74	92
Chest	Compression (mm)	23.0	21.4	17.7
	V/C (m/s)	0.19	0.17	0.12
Abdomen	Forces (kN)	0.69	0.94	0.97
Pelvis	Forces (kN)	1.31	2.03	2.01
Star Rating (Sum of points)		★★★★★ (15.8)	★★★★★ (16.0)	★★★★★ (16.0)

Table 5.
Test results and star ratings of large-sized car.

Body	Injury	Weight of MDB		
		950kg	1,300kg	1,500kg
Head	HIC36	41	74	81
Chest	Compression (mm)	11.0	14.0	14.0
	V/C (m/s)	0.08	0.09	0.09
Abdomen	Forces (kN)	0.73	0.73	0.65
Pelvis	Forces (kN)	2.66	1.97	2.04
Star Rating (Sum of points)		★★★★★ (16.0)	★★★★★ (16.0)	★★★★★ (16.0)

Results of Rear Seat Dummy

The test results and star ratings of the SID-2 dummy are represented in Table 6 to Table 8. The assessment of the SID-2 dummy was used the method of US-NCAP because the assessment method for the SID-2 dummy does not exist in the current KNCAP. The pelvis forces in SID-2 dummy were larger than that of the ES-2 dummy. This was caused by the absence of side airbags in rear seats. The dominant factor affecting the occupant safety when using the AE-MDB was pelvis injury of the dummy in the rear seat. If the AE-MDB will be adopted in the KNCAP, the assessment method will be prepared for the enhancement of safety for the smaller occupant in rear seats.

Table 6.
Test results and star ratings of compact car.

Body	Injury	AE-MDB (1,300 kg)	AE-MDB (1,500 kg)
Head	HIC36	346	347
Pelvis	Force (kN)	5.73	6.36
Star Rating (Pjoint)		★★ (29.6 %)	★ (42.8 %)

Table 7.
Test results and star ratings of mid-sized car.

Body	Injury	AE-MDB (1,300 kg)	AE-MDB (1,500 kg)
Head	HIC36	228	210
Pelvis	Force (kN)	3.21	3.52
Star Rating (Pjoint)		★★★★★ (3.9 %)	★★★★★ (5.0 %)

Table 8.
Test results and star ratings of large-sized car.

Body	Injury	AE-MDB (1,300 kg)	AE-MDB (1,500 kg)
Head	HIC36	126	133
Pelvis	Force (kN)	4.53	4.35
Star Rating (Pjoint)		★★★★ (11.4 %)	★★★★★ (9.8 %)

Vehicle Body Deformation

The deformed shape of test vehicles using three types of MDB is represented in Figure 6 to Figure 8. The deformations of vehicle side structure showed big difference depending on using the current KNCAP MDB or AE-MDB. There was no big difference between 1,300 kg AE-MDB and 1,500 kg AE-MDB. As shown in Figure 6 to Figure 8, the deformation of the side sill part of the vehicle using the current KNCAP MDB was larger than that of the vehicle using the AE-MDBs. This is because of the height of the deformable barrier of AE-MDB.

Figure 6. Deformed shape of large-sized car using 950 kg MDB.

Figure 7. Deformed shape of large-sized car using 1,300 kg MDB.

Figure 8. Deformed shape of large-sized car using 1,500 kg MDB.

Using the AE-MDBs, around the doors of the pelvic area of ES-2 dummy and SID-2 dummy were significantly deformed. The deformed pattern of B-pillar of three types of vehicle was similar. In the case of mid-sized car, the maximum deformation of around the door of pelvic area of SID-2 dummy using the 1,500 kg AE-MDB was 28 mm larger than that of using the 1,300 kg AE-MDB.

CONCLUSIONS

Three sizes of vehicles (compact car, mid-sized car and large-sized car) were tested which MDB will be appropriate for the future KNCAP side impact test. The results of the ES-2 dummy in driver's seat and the SID-2 5 %tile female dummy in rear seat were represented. Increasing the weight of MDB, the safety of smaller passenger cars may decrease. Larger passenger cars may not be affected according to the increase of MDB weight. The side airbags and the curtain airbags could reduce the ES-2 dummy injuries by not contacting the dummy with the vehicle interior. The dominant factor affecting the occupant safety when using the AE-MDB was pelvis injury of the dummy in the rear seat. The deformations of vehicle side structure showed big difference depending on using the current KNCAP MDB or AE-MDB. Using the AE-MDBs, around the doors of the pelvic area of ES-2 dummy and SID-2 dummy were significantly deformed. This may result the increase of the pelvis force.

Despite the increase of MDB weight, there were no big differences in the results of the ES-2 dummy in the driver's seat. This was caused by the side airbags and the curtain airbags.

If the AE-MDB will be adopted in the KNCAP, the assessment method will be prepared for the enhancement of safety for the smaller occupant in rear seats.

REFERENCES

[1] Ministry of Land, Transport and Maritime Affairs of Korea, "Enforcement Decree on the New Car Assessment Program, 2012.

[2] Korean National Police Agency, "Traffic Accident Statistics of 2011", 2012.

[3] Ministry of Land, Transport and Maritime Affairs of Korea, "Research on the improvement for the KNCAP", 2012.

[4] EEVC, "Progress on the development of the advanced European mobile deformable barrier face (AE-MDB)", 2003.