EVALUATION METHOD OF THE EFFECTIVENESS OF ACTIVE SAFETY TECHNOLOGIES IN LIGHT GOODS VEHICLES BASED ON REAL WORLD ACCIDENTS RECONSTRUCTION

Francisco Javier, Páez Ayuso
Arturo, Furones Crespo
University Institute of Automobile Research (INSIA) – Technical University of Madrid (UPM)
Spain
Paper Number 13-0480

ABSTRACT

There are limited data in Europe on light goods vehicles (LGVs) crashes. The project IMPROVER shows that the country of the EU-25 with the highest number of fatalities in accidents involving LGVs is Spain (2002).

The aim of this paper is the evaluation of the accident reduction which could be achieved by incorporating active safety technologies to LGVs involved in crashes, based on a reconstruction evaluation method.

The methodology is based on a retrospective analysis of the accident technical reports from the Spanish Traffic Directorate (DGT). It comprises 254 fatal accidents with LGVs involved, occurred in rural roads during 2009 and 2010. This information has been analysed to identify the most significant stages (independent variables) during the pre-crash phase based on the HFF method. Afterwards a classification tree has been created using those independent variables and their interactions to describe and quantify their influences on LGV accidents.

Accidents have been analyzed and evaluated considering the assumed effect of each specific active safety system proposed –ABS, BAS and ESP-. Every case has been simulated using the PC-Crash® software. Two crash situations have been modelled: the first one is a reconstruction of the real accident and the second one is a simulation in which the operation of the active systems is emulated modifying the collision parameters and its potential consequences.

This study makes the identification of critical parameters easier and it simplifies the development of practical solutions by quantifying their potential impact on future actions to improve LGVs safety. Reconstructions of these accidents were performed using software techniques to estimate multiple parameters from the collision, the pre- and post-impact phases. The gathered information has been used for the evaluation of the effectiveness of the Antilock Brake System (ABS), the Brake Assist System (BAS) and the Electronic Stability Programme (ESP). The performance of these systems has been simulated in reconstructions, so it is possible to assess their capacity for the avoidance of the analysed accidents.

The implementation of active safety technologies in all new vehicles will lead to achieve reductions in LGVs-involved accidents or to decrease their severity. In order to assess the safety performance of these vehicles it is necessary to be able to identify these vehicles data relating to accident involvement, vehicle registration and vehicle usage. It would improve any future evaluations of LGVs safety performance or help to monitor the effects of any policy decisions.

For many years numerous studies have conducted to estimate the effectiveness of safety systems for vehicles. However, the most of these ones has been focused on passenger cars and clear gaps were detected in the case of specific studies on LGVs.

Although the performance of active safety technologies explains basically their behaviour in test conditions, they are not enough to assess their success in each real world scenario. A full forecast of their potential is only possible by modelling the driver-vehicle-system-environment. The reconstruction of real world accidents is the core tool of the proposed method.

INTRODUCTION

There are limited data in Europe on light goods vehicles (LGVs) crashes. In-depth work has been carried out in Britain (Lenard, J. et al., 2000 [5]) and Germany (Niewohner, W et al., 2001 [6]). These investigations indicate that while LGVs do not have a higher crash rate than other motor vehicles, crashes tend to occur in predominantly urban environments.

The growing problem of accidents in the transport of goods in light vehicles has been undertaken in some studies in Europe. The project IMPROVER (Höhnscheid et al., 2006 [2]) shows that the country of the EU-25 with the highest number of

fatalities in accidents involving LGVs is Spain (2002).

In Spain, accidents involving LGVs account for 9,5 % of the total accidents (average value in the period 2000 - 2010). The evolution of road accidents in this period of time (*Figure 1*) draws: a low variation in 2000 - 2003; a reduction in 2003 - 2005; and a high increase in 2005 - 2007 especially in accidents involving LGVs.

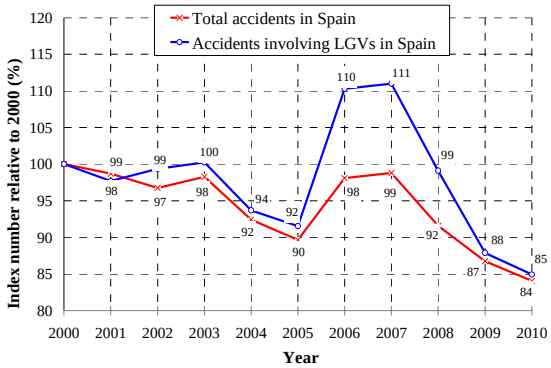

Figure 1. Evolution of accidents involving LGVs in Spain per year (2000 - 2010).

In order to assess the safety performance of LGVs it is necessary to identify data of these vehicles in accident databases. Many EU Member States do not collect information on goods vehicles of this size and many use different definitions of smaller goods vehicles that could not be made to fit the European definitions. The type of vehicle "LGV" as considered in this paper includes two categories:

- Category 1 (C1): N1, vehicles designed and constructed for the carriage of goods and having a maximum mass not exceeding 3,5 tonnes (extracted from 2007/46/EC [7]). This definition is consistent with "Light Goods Vehicle, LGV" or "Light Commercial Vehicle, LCV".

- Category 2 (C2): car-derived LGV, a variant of a passenger car design that has been adapted to carry goods.

The aim of this paper is the evaluation of the accidents reduction which could be achieved by incorporating active safety technologies to LGVs involved in crashes, based on a reconstruction evaluation method. The methodology proposed identifies the most significant stages (independent variables) during the pre-crash phase based on the HFF method (Van Elslande, P. et al., 2007 [8]). Afterwards it creates a classification tree using those independent variables and their interactions to describe and quantify their influence on LGV accidents.

SOURCES AND METHODS

Accident database and reconstruction tool

The model developed to study collisions with LGVs involved uses information from an accident database compiled by the Accidentology and Vehicle Dynamics Department of INSIA within the FURGOSEG project (INSIA, 2011 [3]).

The methodology was established to carry out a retrospective in-depth analysis of Accident Reports. These reports came from two different sources, the Spanish Traffic Police and the Spanish Traffic Directorate (DGT), and contained detailed information about real-world fatal accidents involving LGVs and occurred in Spanish rural roads between 2009 and 2010.

Fully detailed scene plans were drawn to be used in the reconstruction process. The plans condensed as much information as possible covering all events that took place before, during and after the collision, illustrating positions, distances, marks and most plausible paths for the vehicles involved. The scaled plans were used as backgrounds on the computer simulations.

Next the corresponding vehicle was selected in each case and loaded from the vehicle database available in the computer program; its characteristics were set up according to the real vehicle.

All available information and data investigated have been analyzed and were used to simulate the accidents with the PC-Crash® software.

Simulation of ABS, BAS and ESP systems operation

Every single case has been simulated twice using the PC-Crash® software: the first is a reconstruction of the real accident and the second is a simulation in which the operation of the active systems –ABS, BAS and ESP- is emulated modifying the collision parameters and its potential consequences. A common simulation procedure with simplified hypotheses about the driver reactions and the active systems operation was previously adopted, considering the functional criteria of these systems:

- The Antilock Brake System (ABS) is an automobile safety system that allows the wheels on vehicle to continue interacting with the road surface as directed by driver steering inputs while braking, preventing the wheels from locking up. The ABS generally offers improved vehicle control and decreases

stopping distances on dry and slippery surfaces for many drivers.

- The Brake Assist System (BAS) combined with the Antilock Brake System (ABS), measures the speed and force of brake application to determine whether the driver is attempting an emergency stop. If such an emergency is determined, the system applies additional brake pressure to allow the driver to take full advantage of the Antilock Brake System (ABS) which prevents wheel lock up.

- The Electronic Stability Program (ESP) is a technology that improves the vehicle stability by detecting and reducing the loss of traction. When it detects loss of steering control, it automatically applies the brakes to drive the vehicle where the driver intends to go and it also reduces the engine power until the control is regained.

Both real reconstructions and ABS/BAS/ESP-simulation outputs were compared by pairs. Examples of such comparison are presented in figure 2 and figure 3 which illustrate some key sequences. The possible perception point (PPP) is the same for both cases as also is the reaction time of the driver

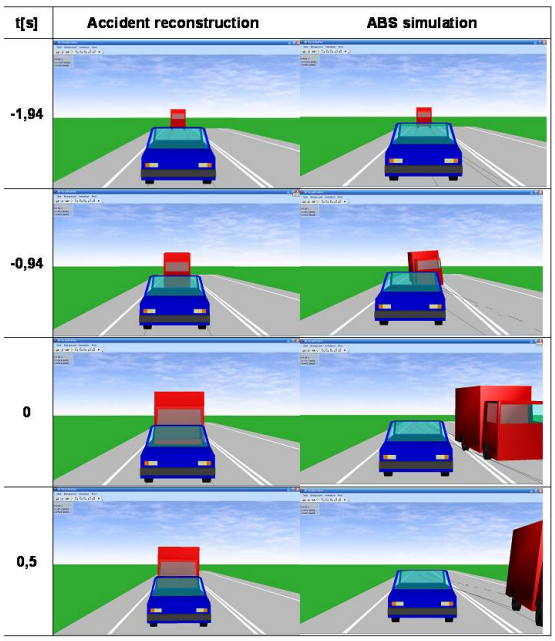

Figure 2. Time-line comparison between the real accident reconstruction and the ABS simulation.

Figure 2 shows a simulation of a rear-end collision and in which the braking system of the involved LGV does not contain ABS system. During the real situation and when the driver applies an emergency braking action the wheel is locked up; after that, the vehicle does not react to steering wheel inputs.

When the ABS is simulated, the vehicle develops combined manoeuvres (braking and steering) and the collision avoidance action is possible.

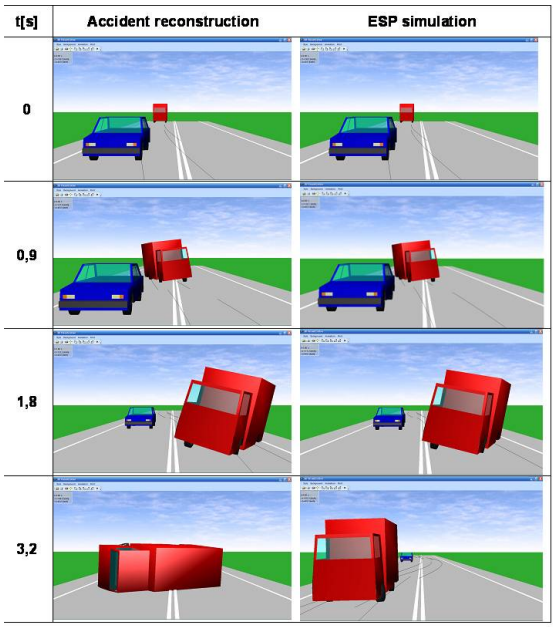

Figure 3. Time-line comparison between the real accident reconstruction and the ESP simulation.

Figure 3 shows a simulation of a LGV overtaking another moving vehicle and driving along the same lane. The real LGV does not include an ESP system. During the real situation and when the driver tries to return to his lane after the overtaking manoeuvre, the LGV rolls over onto its side due to the inadequate velocity. When the ESP is simulated, it helps the driver and the vehicle finishes the manoeuvre successfully.

Method for analysis of accident causation

An operational method of accident causation analysis is necessary to reach the definition of more appropriate measures, involving notably electronic safety functions, possibly able at preventing it. Along this objective, the HFF method (Human Functional Failures) (Van Elslande, P. et al., 2007 [8]) has been applied to the investigated accidents. It presents several operational grids of analysis along the accident process production, in line with theoretical models, which offer a means of progressing in the conceptions regarding the human role in accident generation.

The first stage of analysis consists in drawing up the accident scenario in terms of the sequence of events along: the driving phase, the rupture phase, the emergency phase and the collision phase, and, in particular, describing the initial system status, identifying the triggering event and reconstructing the emergency manoeuvre.

The second stage is to identify the mechanisms that contribute to the production of this sequence of events: these mechanisms are found in the system component interaction.

The coding process of the HFF method involves 11 steps supported by corresponding coding sheets. One interest of the method is that it offers both the possibility to process each step in a disaggregated manner, so giving the opportunity to provide quantitative results for each category of data; and it also offers the capacity to provide aggregated results through the definition of typical HFF producing scenarios. The 11 steps of analysis are the following:

- Step 1: define the pre-accident priving Situations (with the HFF_Sheet1).
- Step 2: define the initiating factors (with the HFF_Sheet2).
- Step 3: define the pivotal human functional failure (with the HFF_Sheet3).
- Step 4: define the triggering factors (with the HFF_Sheet2).
- Step 5: define the typical HFF generating scenarios (with the HFF_Sheet4).
- Step 6: define the involvement level of the driver (with the HFF_Sheet5).
- Step 7: define the emergency failure (with the HFF_Sheet6)
- Step 8: define the emergency limiting factors (with the HFF_Sheet2)
- Step 9: define the crash configuration (with the HFF_Sheet7)
- Step 10: define the crash aggravating factors (with the HFF_Sheet8)
- Step 11: define the crash pictograms (with the HFF_Sheet9).

Classification model

The tool of classification trees was used to find the most influential accident causation mechanisms that contribute to the accidents reduction achieved by incorporating active safety technologies. This is an effective technique for studying complex systems with many variables.

Classification and regression trees (Breiman et al., 1984 [1]) are hierarchical statistical techniques suitable for exploring the data set, detecting all significant interactions and developing chart models that illustrate how the response variable depends on the explanatory variables.

The potential effectiveness of each active safety technology (ABS+BAS, ESP) was the dichotomous response variable for the classification tree. The two possible values (effective=1 or ineffective =0), were estimated in each accident by the simulation of their operation in real scenarios.

The SPSS statistical program was used to create the classification tree. The following explanatory variables were initially introduced as input:

- No_vehicles: number of vehicles involved in the accident.
- LGV_category: category of the LGV, as previously defined.
- The eleven steps contained in the method of accident causation analysis (HFF).

The method used to create the tree was CHAID (Kass, 1980 [4]). This method considers the gain of each variable and iteratively includes the most relevant. Of the explanatory variables introduced in the initial model, the algorithm kept only the most significant two, which had the largest influence on the response variable. The CHAID algorithm splits the independent variables into discrete intervals for classification.

RESULTS

Descriptive statistics of the accidents database

According to the LGVs categories as defined previously, the figure 4 shows the distribution of LGVs involved in real-world fatal crashes by category. It comprises 266 LGVs involved in 254 fatal accidents occurred in rural roads during 2009 and 2010.

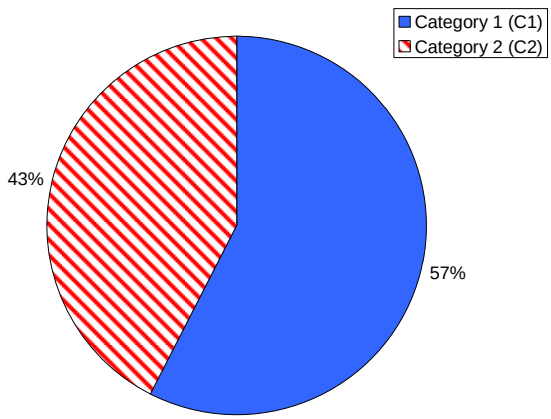

Figure 4. Distribution of LGVs involved in real-world fatal crashes by category (2009 and 2010).

The distribution of these accidents by crash configuration and by category is drawn in figure 5.

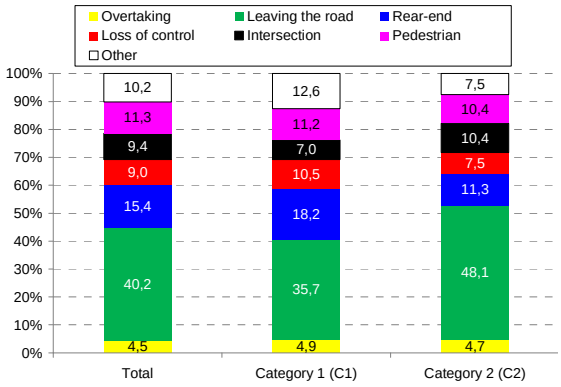

Figure 5. Distribution of LGVs involved in real-world fatal crashes by crash configuration and by category. (2009 and 2010).

Potential effectiveness of active safety technologies

The potential effectiveness of the analysed systems in LGVs involved in accidents is shown in figure 6, figure 7 and figure 8.

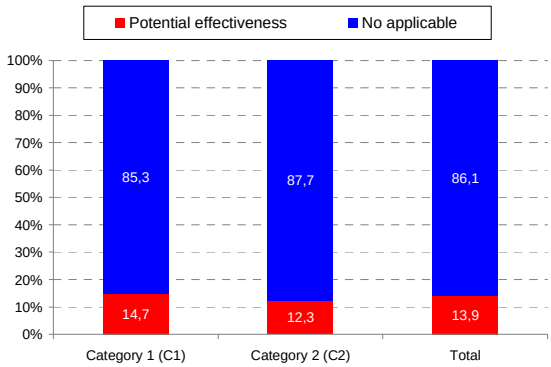

Figure 6. Potential effectiveness of the ABS system in LGVs involved in real accidents (2009 and 2010).

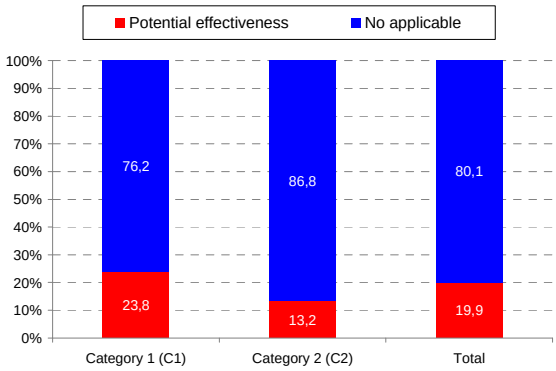

Figure 7. Potential effectiveness of the ABS+BAS system in LGVs involved in real accidents (2009 and 2010).

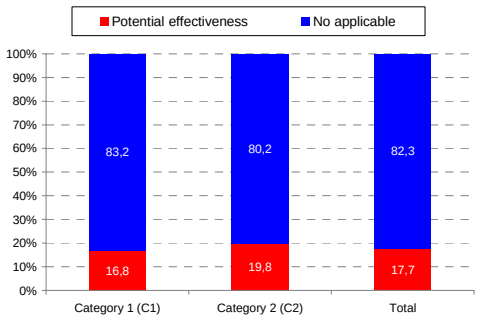

Figure 8. Potential effectiveness of the ESP system in LGVs involved in real accidents (2009 and 2010).

Variable interactions and classification. ABS+BAS system

The resulting classification tree grew into three depth levels (Figure 9). The first splitting criterion was the primary crash configuration (HFF_Sheet7_1). This first branching clearly differentiates between two branches (nodes) of this variable:

- Node 1: LGV is impacted on lateral or back side. In these 56 cases, the ABS+BAS system is effective in 3,6 % of cases.
- Node 2: LGV is impacted on front or it rolls over. In these 210 cases, the ABS+BAS system is effective in 26,7 % of cases.

Node 2 contains an important population of both cases, so it had to be further developed with another criterion. The CHAID algorithm performed a new split on this node through the variable "involvement level of the driver" (HFF_Sheet5). The split from HFF_Sheet5 classifies cases into two new groups:

- Node 3: the LGV driver provokes the disturbance. In these 111 cases, the ABS+BAS system is effective in 18,0 % of cases.
- Node 4: the LGV driver is not at the origin of the disturbance which precipitates the conflict. In these 99 cases, the ABS+BAS system is effective in 36,4 % of cases.

From a statistical standpoint, the tree has a good response. *Table 1* contains the gains of the nodes. As it shows, all of the gains of the tree are in the terminal nodes (leaves): 1, 3, and 4.

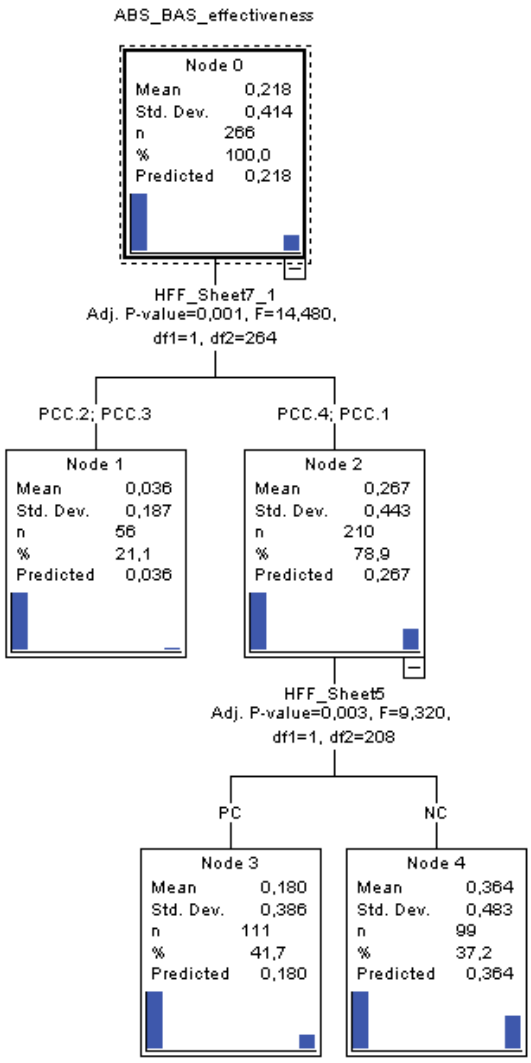

Figure 9. Classification tree for ABS +BAS system (CHAID method).

Gain Summary for Nodes

Node	N	Percent	Mean
4	99	37,2%	,36
3	111	41,7%	,18
1	56	21,1%	,04

Growing Method: CHAID
Dependent Variable:
ABS_BAS_effectiveness

Table 1. Gain summary table for nodes. Growing method: CHAID. Dependent Variable: ABS+BAS effective/ineffective.

Variable interactions and classification. ESP system

The resulting classification tree grew into three depth levels (Figure 10). The first splitting criterion was the emergency failure of the LGV driver (HFF_Sheet6). This first branching clearly differentiates between two branches (nodes) of this variable:

- Node 1: the choice of the maneuver that the road user decided to put forward is not suitable, or the conditions are too short to allow for achieving a successful avoidance. In these 190 cases, the ESP system is effective in 4,2 % of cases.

- Node 2: the intention of maneuver is appropriate but the execution carried out is incorrect or not successful, as a result of a decision forced by the situation constraints. In these 76 cases, the ABS+BAS system is effective in 51,3 % of cases.

Node 1 contains an important population of both cases, so it had to be further developed with another criterion. The CHAID algorithm performed a new split on this node through the variable "involvement level of the driver" (HFF_Sheet5). The split from HFF_Sheet5 classifies cases into two new groups:

- Node 3: the LGV driver provokes the disturbance. In these 77 cases, the ESP system is effective in 7,8 % of cases.

- Node 4: the LGV driver is not at the origin of the disturbance which precipitates the conflict. In these 113 cases, the ESP system is effective in 1,8 % of cases.

From a statistical standpoint, the tree has a good response. *Table 2* contains the gains of the nodes. As it shows, all of the gains of the tree are in the terminal nodes (leaves): 2, 3, and 4.

Gain Summary for Nodes

Node	N	Percent	Mean
2	76	28,6%	,51
3	77	28,9%	,08
4	113	42,5%	,02

Growing Method: CHAID
Dependent Variable: ESP_effectiveness

Table 2. Gain summary table for nodes. Growing method: CHAID. Dependent Variable: ESP effective/ineffective.

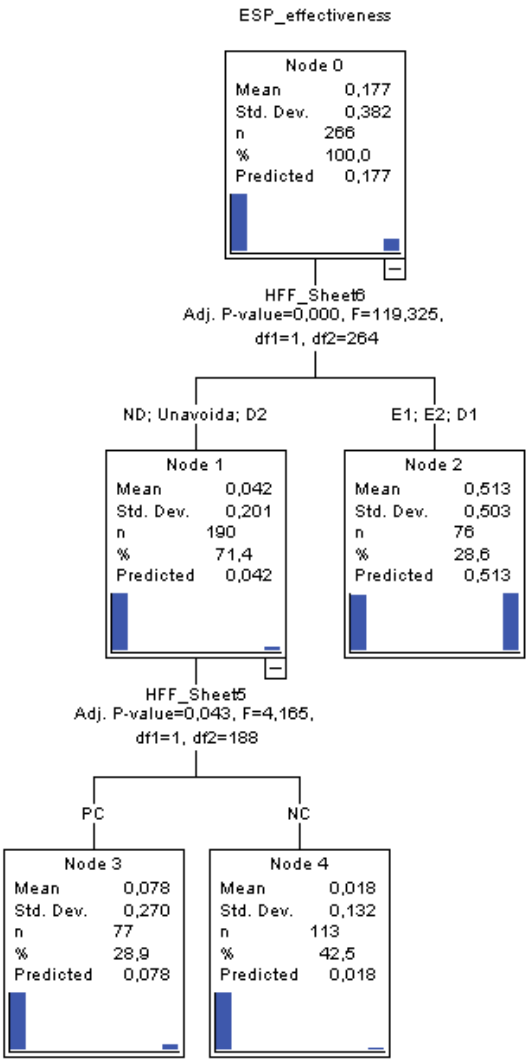

Figure 10. Classification tree for ESP system (CHAID method).

CONCLUSIONS

For many years numerous studies have conducted to estimate the effectiveness of safety systems for vehicles. However, most of these have been focused on passenger cars and clear gaps were detected in the case of specific studies on vans.

Multi-disciplinary approaches such as this study make the identification of critical parameters easier and simplify the development of practical solutions by quantifying their potential impact on future actions to improve van safety. Using this methodology, a database comprising 254 fatal accidents with LGVs involved was created, including information of the vehicle and scene. Reconstructions of these accidents were performed using advanced techniques to accurately estimate multiple parameters from the collision, the pre- and post-impact phases.

The gathered information has been used for the evaluation of the effectiveness of the Antilock Brake System (ABS), the Brake Assist System (BAS) and the Electronic Stability Programme (ESP). The performance of these systems has been simulated in reconstructions, so it was possible to assess their capacity for the avoidance of the analysed accidents. The considered active systems proved to be efficient for avoiding the accidents in a percentage of the studied cases.

The classification model developed through a concurrent approach was used to find the most influential accident causation mechanisms that contribute to the accidents reduction achieved by incorporating active safety technologies. This model performs several functions: variable filtering, classification, interaction detection and quantification of variable influence.

The implementation of active safety systems in all new vehicles will lead to achieve reductions in LGV-involved accidents or to decrease their severity. So, it is recommended to influence on the generalization of ABS, BAS and ESP as standard equipment in all new LGVs.

Finally and in order to assess the safety performance of LGVs it is necessary to be able to identify data related to their accident involvement, vehicle registration and vehicle usage. It would improve any future evaluations of LGV safety performance or help to monitor the effects of any policy decisions.

ACKNOWLEDEGEMENTS

This research was partially supported by the Ministry of Public Works and Transport (FURGOSEG: “Desarrollo y aplicación de una metodología integrada para el estudio de los accidentes de tráfico con implicación de furgonetas”, P24/08) and the Community of Madrid (SEGVAUTO: “SEGuridad de Vehículos AUTOmóviles”). The authors would like to thank the experts of the Spanish Traffic Police and the Spanish Traffic Directorate (DGT) for their contribution.

REFERENCES

[1] Breiman, L., Friedman, J., Olshen, R. and Stone, C. (1984). Classification and Regression Trees. Wadsword International. Group. CRC Press. Belmont. California.

[2] Hohnscheid D, K. J. and others. 2006. “Impact assessment of measures concerning the improvement of road safety of light goods vehicles (LGV)”. Final report of Subproject 2, IMPROVER Project.

[3] INSIA. 2011. “Desarrollo y aplicación de una metodología integrada para el estudio de los accidentes de tráfico con implicación de furgonetas. FURGOSEG ”. Nº 2008-2011 - P24/08. Madrid.

[4] Kass, G. (1980). An exploratory technique for investigating large quantities of categorical data. J. Royal Statistical Society. Series C (Applied Statistics) 29, 2, 119−127.

[5] Lenard, J., Frampton, R., Kirk, A., Morris, A., Newton, R, Thomas, P. and Fay P. 2000. “An overview of accidents and safety priorities for light goods vehicles”. IMechE paper.

[6] Niewohner, W; Berg, F. A. and Froncz, M. 2001. “Accidents with Vans and Box-type Trucks (Transporters); Results from Official Statistics and Real-life Crash Analyses”. In Proceedings of Enhanced Safety in Vehicles (ESV) Conference, 2001.

[7] The European Parliament and the Council of the European Union. 2007. “Directive 2007/46/EC on establishing a framework for the approval of motor vehicles and their trailers, and of systems, components and separate technical units intended for such vehicles”. Official Journal of the EU, L 263, September 2007.

[8] Van Elslande, P., Fouquet, K. (INRETS). 2007.“Analyzing 'human functional failures' in road accidents”. D5.1. from Project No. 027763 – TRACE.