REVISION RECORD			
REV	DESCRIPTION	DATE	BY
A	CHANGED DRAWING NUMBER, WAS DLAB100-001	11/28/2001	DW

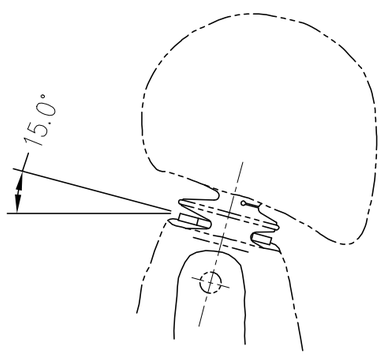

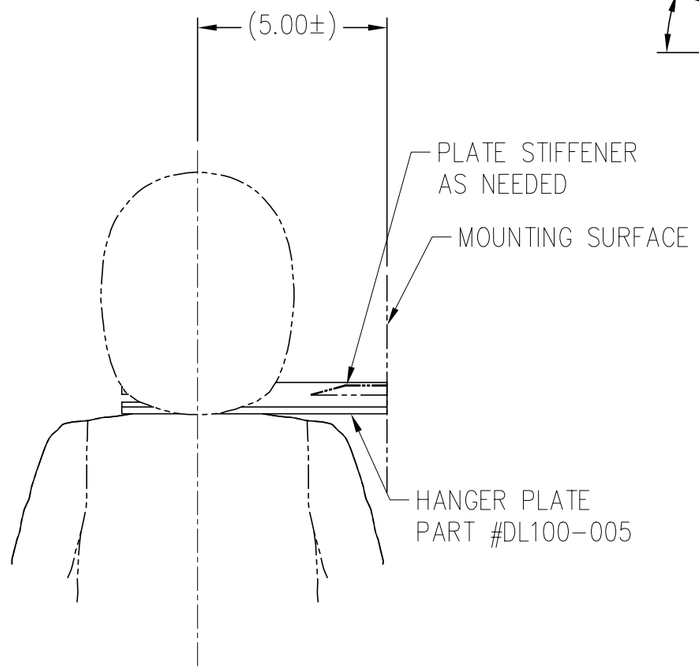

CRABI 12 MONTH OLD

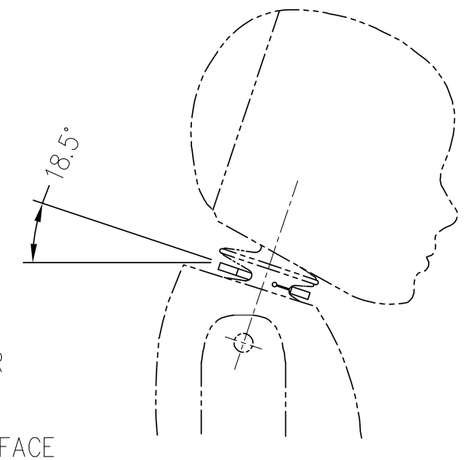

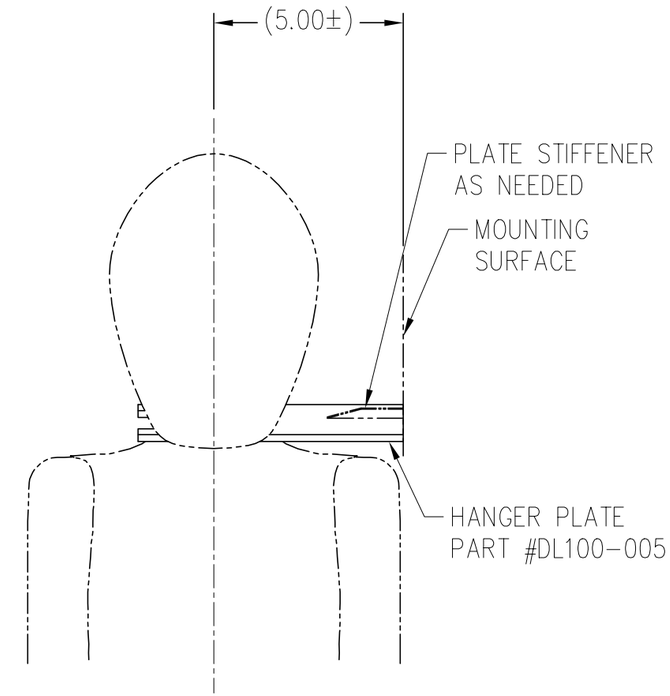

HYBRID III 3 YEAR OLD

UNITS ARE in/mm

TOLERANCES ARE: *

DECIMALS		ANGLES
.X	±0.1/2.5	+ 0.5°
.XX	±0.01/.25	
.XXX	±0.005/.127	

* unless otherwise noted

MATERIAL:		
SCALE NONE		
APPROVALS	DATE	
DRAWN D. WALKER	11/9/2001	
CHECKED J. McFADDEN	12/11/2002	
ENG		

NATIONAL HIGHWAY TRAFFIC SAFETY ADMINISTRATION

DUMMY HANGER

CRABI 12 MONTH OLD & HYBRID III 3 YEAR OLD

SIZE	DRAWING NUMBER	REV
B	A DL100-001	

REVISION RECORD			
REV	DESCRIPTION	DATE	BY
A	CHANGED DRAWING NUMBER, WAS DLAB100-005	11/28/2001	DW

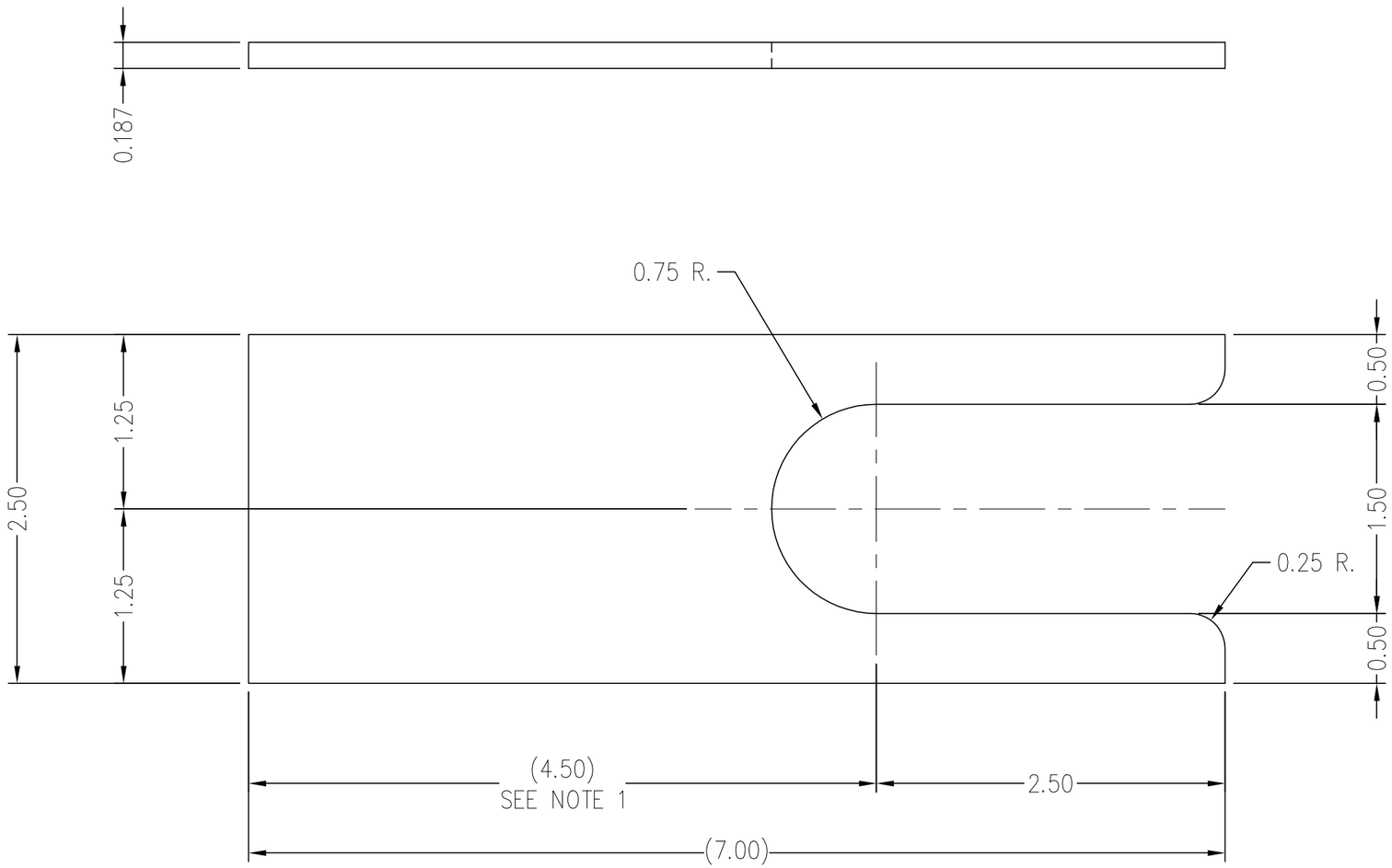

NOTES:
1. 4.50" IS THE MINIMUM DIMENSION REQUIRED TO CLEAR THE DUMMIES SHOULDER AND ARM.

UNITS ARE in/mm

TOLERANCES ARE: *

DECIMALS	ANGLES
.X ±0.1/2.5	± 0.5°
.XX ±0.01/.25	
.XXX ±0.005/.127	

* unless otherwise noted

MATERIAL: STEEL		
SCALE 1:1		
APPROVALS	DATE	
DRAWN D. WALKER	11-9-2001	
CHECKED J. McFADDEN	12/11/2002	
ENG		

NATIONAL HIGHWAY TRAFFIC SAFETY ADMINISTRATION

HANGER PLATE

CRABI 12 MONTH OLD & HYBRID III 3 YEAR OLD

SIZE	DRAWING NUMBER	REV
B	A DL100-005	