THE DEVELOPMENT OF A NEW CLASS OF TWO-WHEELER VEHICLES

Heidi Osendorfer
Stefan Rauscher
BMW AG
Germany
Paper Number 01-S8-O-475

ABSTRACT

With the C1, BMW launched a new class of two-wheeler vehicle. Focusing particularly on comfortable, safe local travelling even in heavy traffic, the main target in developing this vehicle was an exceptionally high level of safety performance. The C1 is the first two-wheeler on the roads to be equipped with an aluminium space frame protecting the rider in accidents. Specially developed load-limiting safety belts and energy absorption elements mounted to the space frame protect customers particularly well. As a result, several countries have approved the C1 for use without a crash helmet. The ISO 13232 motorcycle crash test procedure was used during the development of the C1 with additional sled and component tests being conducted to fully evaluate the safety concept. A new class of vehicle was thus created with unparalleled levels of rider protection.

Figure 1. C1

INTRODUCTION

The underlying idea behind the C1 was to create a vehicle that combines the attractions of a motorized two-wheeler (in particular the pleasure of driving a single-track vehicle, the feel of the wind in your face, the minimal space required both to ride and park such a vehicle and the relatively low purchase and maintenance costs) with the benefits of a motor car (comfort, safety, transport features). Above all, it is the unique safety concept which places the C1 in a class of its own between the motorcycle and the motor car. With the C1, the philosophy of passive safety has been carried-over from the automobile to the field of the two-wheeler. Passive safety components are not, as is usual in the two-wheel field, worn by the human rider (protective clothing, helmet), but are applied to the vehicle.

SAFETY CONCEPT REQUIREMENTS

As in the case of passenger cars, a large proportion of the safety concept requirements were derived from real-life accident events. Several hundred motorcycle accidents have been analysed at BMW. In considering the nature of the collision, the clear leader was the frontal collision, accounting for around 42%. Side and rear collisions at 4% and 2% may be regarded as being of relatively minor significance (Figure 2).

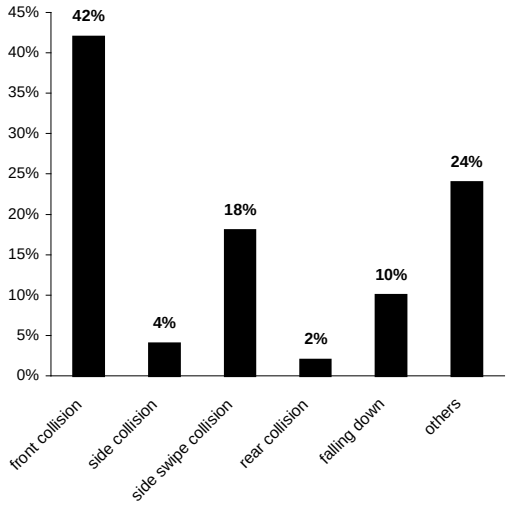

Figure 2. Motorcycle types of collisions

The most frequently struck object in a motorcycle accident is the car, which accounts for 50% of cases (Figure 3).

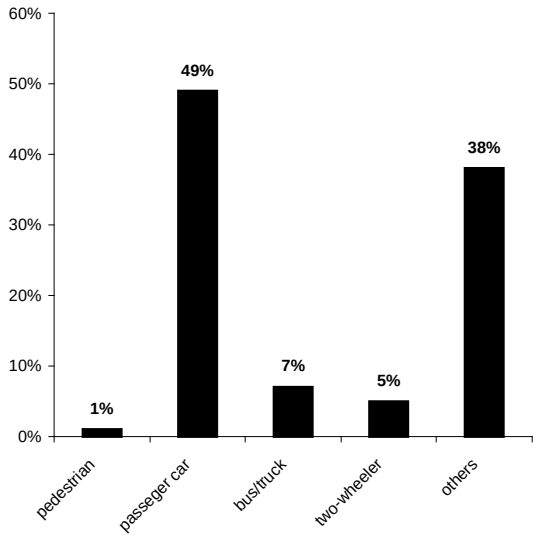

Figure 3. Opposing vehicles in accidents

A further important element is the international standard ISO 13232: Motorcycle Crash Procedure. This standard comprises eight coherent parts. The various configurations of an accident involving a two-wheeler and a motor car are defined on the basis of recognized accident data. The seven most frequent configurations, which at the same time constitute a high risk of injury, are evaluated using crash tests which in turn serve to validate the computer simulation. Test procedures, dummies and injury criteria adapted to the needs of motorcycles also form part of the standard.
In addition, attempts have been made to simulate a single-vehicle accident and a rear-impact collision as well as individual component tests. In many cases, these have been adapted from passenger car tests.

SAFETY DEVELOPMENT

One thing was clear right from the start: the rider should be extensively protected from direct contact with obstructions and from free, uncontrolled flight. The momentum of the vehicle must be deliberately moderated and the rider must share in the retardation of his or her vehicle at the earliest moment. Our intention is to achieve this aim by means of a stable frame structure, energy-absorbing components and a restraint system.

Figure 4. Safety frame

Stable frame structure

The aluminium space-frame design chosen for the C1 (Figure 4) comprises a main frame, roof frame and bolted shoulder hoops. Maintaining the safety cell required to protect the rider makes high demands on the frame structure, particularly in the case of serious accidents. The loads acting from outside are countered by a suitably rugged frame structure. In addition, the main frame in combination with the shoulder hoops absorbs the belt forces generated in a crash. The belt anchor points have been tested using the static belt pull test. The shoulder belt and the three-point belt are tested individually. The C1 frame is firmly clamped and the belts are stressed to 6.75 kN for a period of 200 ms (Figure 5).

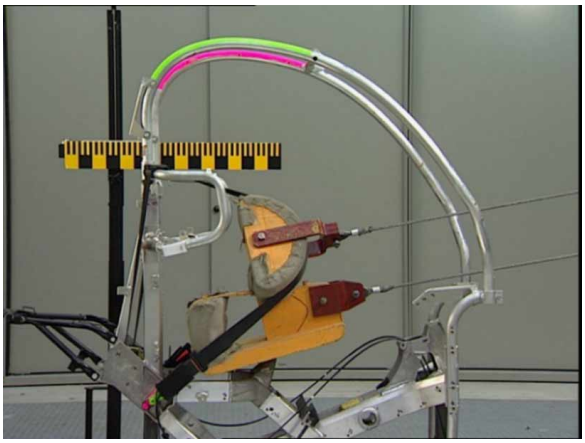

Figure 5. Belt pull test

The roof frame is subjected to a modified FMVSS 216 crush test. In accordance with this standard, the structure is placed under load in a quasi-static condition. The frame must withstand a load of 22 kN with a max. deformation of 127 mm (Figure 6).

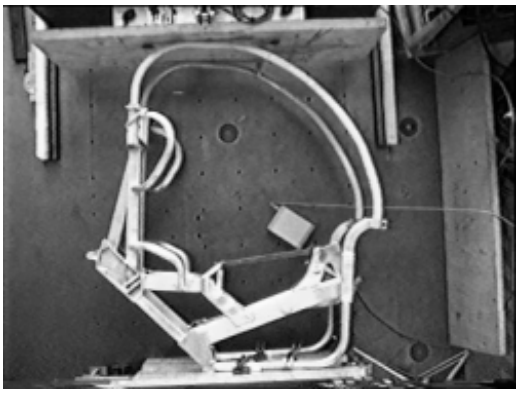

Figure 6. Roof crush test

The shoulder hoops, which are bolted for ease of repair, hold the securely belted rider in the frame structure if the vehicle tips over.

Deformation elements

To keep the load on the rider to a minimum, a rigid polypropylene foam element is mounted level with the centre of gravity. This foam element is capable of up to 300 mm deformation and together with the telelever acts in the same way as the crumple zone of a motor car. The location of the foam element also resist the pitching moment developed during impact. In order to tune the foam body and the telelever, a drop test was carried out to simulate a collision with a stationary motor car (Figure 7).

Figure 7. Drop test

There are also two replaceable deformation elements attached to the shoulder hoops. These have been designed to meet the requirements of the lateral fall test which was specially developed for this type of vehicle (Figure 8). These foam elements reduce kinetic energy, lessening the stress on the rider's head and neck and ensuring a safety distance of 70 mm between head and road.

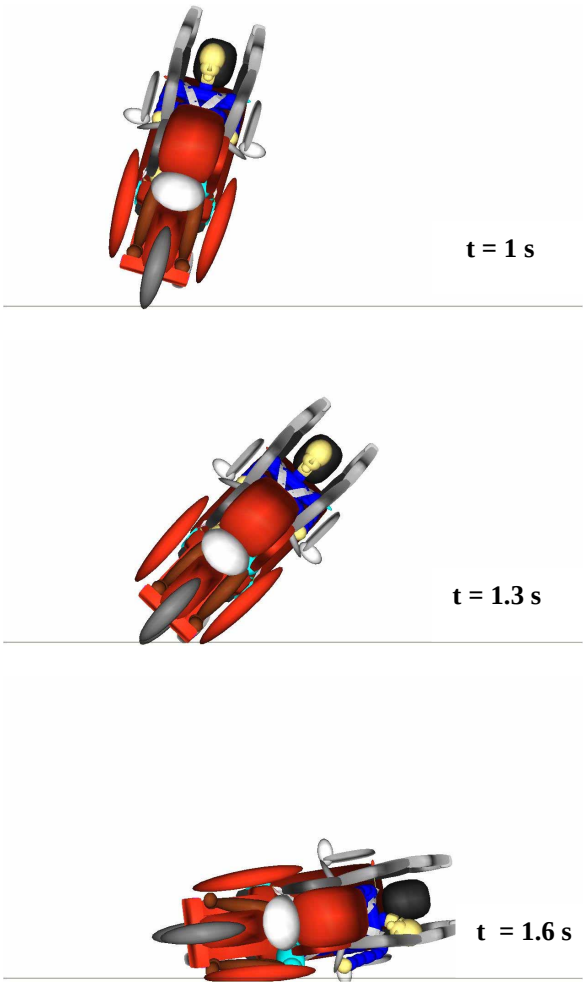

Figure 8. Simulation: Lateral fall test

Restraint systems

The rider is coupled with the passenger cell via two safety belts. Unlike in a passenger car, the rider must be protected from sliding out to left or right, numerous belt designs were tried out, such as the harness system. For operative and comfort reasons, a three-point auto-locking manual belt on the left and a two-point auto-locking manual belt on the right-hand side were chosen. The two belts cross in the chest area. To reduce the belt load, two force limiters are fitted. When a defined level of force is exceeded, a torsion bar in the locked retractor mechanism rotates

and releases a specific length of belt. The result is a significant reduction in the load on chest and neck in comparison with conventional belt systems. To improve the convenience with which the belts can be unlatched and to facilitate rapid assistance, both belt buckles can be released via a central rocker lever. The lever is built to an ergonomically efficient design and arranged beneath the steering where its colour makes it easily visible to emergency rescue personel at the scene of an accident.

Since the extensive safety concept embodied in the C1 remains ineffective if the rider is not belted, an immobilizer was developed. Only when the switches incorporated in both belt buckles are activated will the engine reach the necessary starting speed for the automatic transmission.

To prevent submarining, located at the front of the C1 seat is a foam element which acts as a ramp. This foam element is designed to reduce the load exerted on the pelvic region.

The stability of the restraint system components was checked by sled test (Figure 9) and the restraint characteristics optimised for 5th% female, 50th% and 95th% male.

The head restraint comes into play in the case of both a rear collision and the rebound following a frontal impact. Likewise the roof frame and the handle bars are padded in areas where the head may come into contact.

Figure 9. Sled test set-up

Results of the computer simulation

Computer simulations were used to investigate and evaluate the wide variety of ISO crash load permutations. Potential optimizations revealed by the simulation were confirmed in component tests and appropriate changes made to the design. The principal focus of attention was on the belts, the seat shape, shoulder hoops and deformation elements. The final assessment took the form of a risk/benefit analysis.

The simulation software used was MADYMO. On the basis of component tests a functionally faithful representation of the C1 and a BMW 318i was built. The rider of the C1 was the 50th percentile Motorcycle Anthropometric Impact Dummy.

For the risk/benefit analysis in collision situations involving a passenger car, the method described in ISO 13232 was used.

A comparison was made between a two-wheeler with safety system and one without (Figure 10). The comparison vehicle used in this case was a C1 without roof frame, safety belt or deformation elements (C0). The dummy riding the C1 was modelled without a helmet and that on the C0 with a helmet.

The simulation was validated on the basis of the 7 crash tests described in ISO 13232, Part 2 and carried out with the C1 (Figure 11). Thereafter, for the risk/benefit analysis, 200 different types of collision with a passenger car over a period of up to 5000 ms were simulated and evaluated. The 200 configurations were based on accident analysis data and are likewise described in the ISO 13232 motor cycle crash standard. At 5000 ms, the lateral fall following the initial collision was also taken into account.

For conventional passenger car, the benefit ratio for restraint systems lies between 3 and 7 percent.

For the C1, the resulting injury risk/benefit ratio was 10%. Included in the 10% are AIS 1 injuries caused by the belt at higher impact speeds.

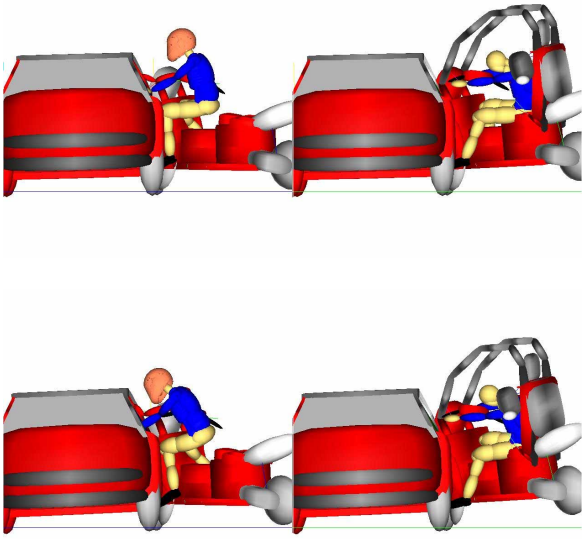

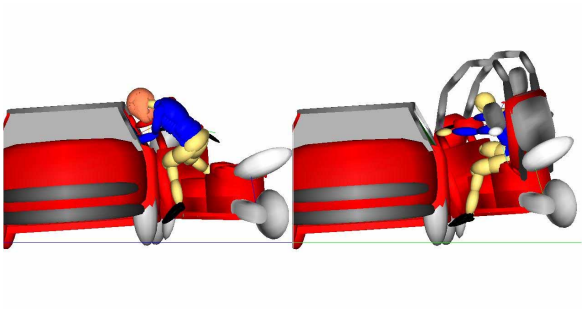

Figure 10. Computer simulation: C1/C0 (t=90 ms, t=110 ms, t=130 ms)

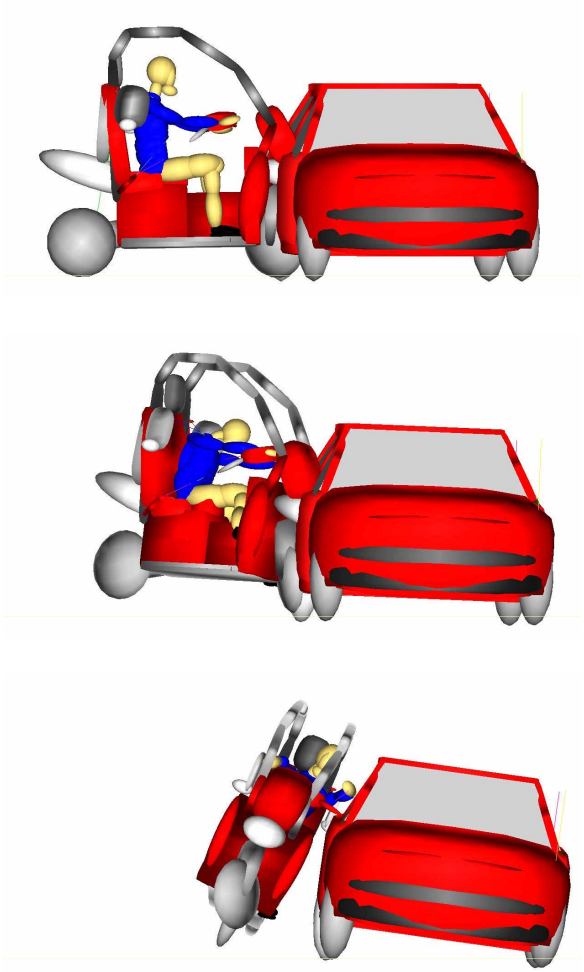

Figure 11. Computer simulation (t=40 ms, t=110 ms, t=260 ms)

Crash tests

The potential protection for the rider results from a high-stability frame structure, the quality of the deformation characteristics, high-performance restraint systems and the manner in which these features are harmonized with one another. This harmonization of components was achieved through crash testing. The C1 was subjected to a comprehensive crash test program. The ISO 13232 motorcycle crash procedure formed the basis for the tests (Figure 12). Additional crashes such as a frontal collision with a wall, a rear-impact collision and a simulated single-vehicle accident rounded off the overall picture.

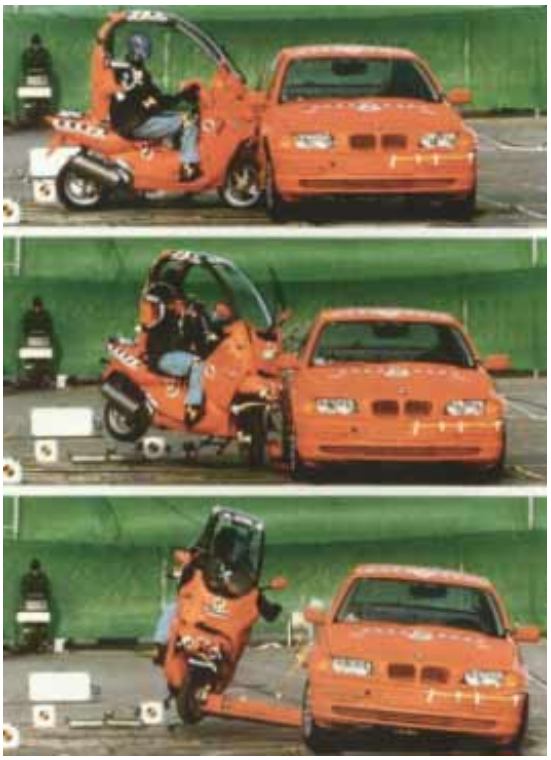

Figure 12. Crash test ISO 143 (C1: 48 km/h, car: 24 km/h)

HELMETS NO LONGER COMPULSORY

The object of the C1 safety concept was to concentrate measures to protect the rider on the components of the vehicle itself rather than on personal protection equipment. The rider of a C1 does not require the protection of a helmet as designed for

a conventional motorcycle. Measures applied to the vehicle itself prevent direct blows to the head.
The belt system holds the rider in the vehicle in the event of a crash. As in a motor car, the head can only be restrained via the articulated connection constituted by the neck. The mass of a conventional motorcycle helmet, which exceeds 1 kg, increases the strain on the neck. As a result an increased moment is applied to the length and base of the neck.
For this reason, contacts with the relevant experts were made even as the vehicle was being conceived.
The German Federal Ministry of Transport commissioned the Federal Department of Roads (the BASt) to carry out an investigation. In its report, the BASt came to a gratifying conclusion: provided that certain requirements are fulfilled, an exemption order may be approved making it no longer compulsory to wear a helmet. In May 1998, the 8th exemption order under the road traffic regulations (the StVO) was duly passed. Under this ruling, two-wheeled vehicles, which fulfil the following requirements, may be ridden without a helmet:

- The belt system must meet the state of the art and comply with Directive 97/24/EC.
- A light signal is required clearly warning the rider that he or she is not wearing a belt, as per Directive 78/316/EC.
- The requirements for windows must be fulfilled, and the minimum radii complied with, as per Directive 97/24/EC.
- In crash tests impacting the C1 against a motor car in various configurations, the load on the head must not exceed HPC = 1000 (Figure 13).
- During the lateral fall test with a EURO-SID dummy, the dummy's head must not come into contact with a 75 mm thick wooden panel (Figure 14).
- To investigate the rigidity of the roof, a roof indentation test was developed. The frame must withstand a load of 22 kN with a max. deformation of 127 mm.

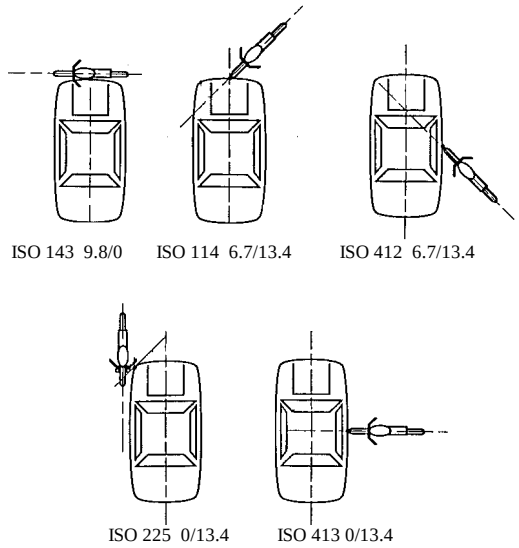

Figure 13. Crash configuration ISO 13232

Figure 14. Lateral fall test

In Europe, the obligatory wearing of helmets is subject to individual national regulation. On the basis of the German exemption order, BMW first approached the authorities in its main markets such as France, Italy and Spain. Implementation in individual countries has varied in line with national legislative procedures. Exemption from the requirement to wear a helmet meanwhile apply in the following countries: Austria, Belgium, France, Germany, Italy, Portugal, Spain, Switzerland and Turkey (Figure 15).

Figure 15. Helmet exemption status in Europe

Observation of the C1 accident behaviour forms part of the requirements for a helmet exemption.

ACCIDENT ANALYSIS

BMW primarily analyse serious traffic accidents involving BMW vehicles in the region of Bavaria. Medical experts from the Ludwig Maximilian University in Munich support the engineers in the assessment of injuries. A knowledge base is available which comprises several thousand car accidents and hundreds of motorcycle accidents.
To get early experience of the real world accident performance of the C1, slight injury accidents outside Bavaria were also investigated.
The small number of cases make a statistical evaluation impossible. However, there is a trend which is illustrated in the following on the basis of two examples, one frontal collision and one side collision. Both examples are comparable with crash tests as per the ISO motorcycle crash standard.

Frontal collision

A motor car turning left from a main road into a side road failed to notice the oncoming C1. A frontal collision took place roughly in the centre of the traffic lane. The C1 collided with the car at an angle of approx. 140°. During the accident, the C1 rolled into the windscreen of the car (Figures 16-17).

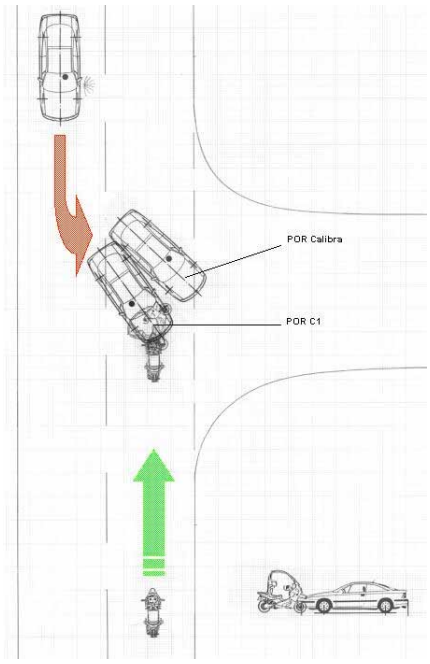

Figure 16. Sketch of frontal collision

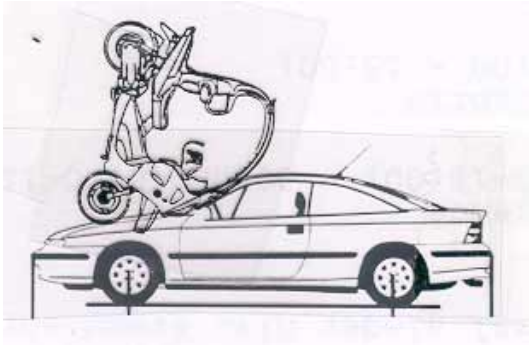

Figure 17. Rolling motion of the C1 during the collision

Figure 18 shows the final positions and above all the damage to the Opel Calibra. The entire front end including bumper, wings, bonnet and the supporting structure behind them are badly damaged.
The deformed windscreen of the Calibra is also visible.

Figure 18. Final positions and damage to car

The pattern of damage to the C1 (Figure 19) is highly positive. Here too, the entire front end is damaged and has thus absorbed an appropriate amount of energy. The frame structure on the other hand exhibits only slight deformation.

Figure 19. Damage to the C1

A reconstruction showed the collision speed of the C1 to have been approximately 50 km/h and that of the Calibra around 20 km/h.

The rider of the C1 was wearing his belt, but no helmet. He suffered only a cut and contusion to the lower left leg and multiple contusions to the left elbow, right knee, base of the spine, ribs and shoulder. At AIS 1 the severity of the injuries is very low.
The safety elements incorporated in the C1 have demonstrated their effect. The front-end containing the crash element is deformed and has thus absorbed the energy. The passenger cell remained intact. The belt system has held the rider within the protective frame structure. As the vehicle fell on its side, the shoulder hoop has prevented the rider striking the road surface and suffering serious injuries, in particular to the head and thorax area.
Imagine this accident involving a normal two-wheeler: the rider would certainly have parted company with his motorbike. In this speed range, it is unlikely that he would have flown right over the Calibra. The result would have been a collision between the rider and his opponent with correspondingly serious injuries.

Side collision

The C1 rider wished to turn left into the main road and ignored the fact that a Golf had the right of way. The Golf collided head-on with the side of the C1 (Figure 20).

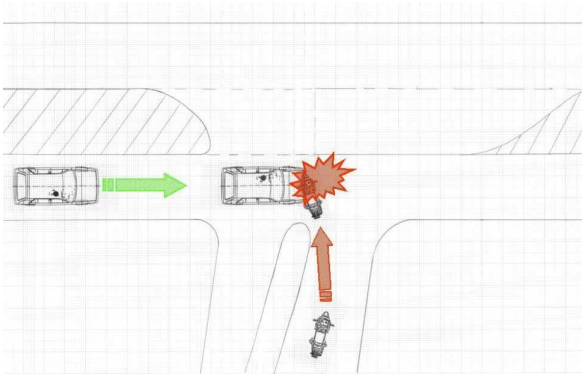

Figure 20. Sketch of side-on collision

The Golf suffered damage to the bumper, bonnet, radiator grill and wings. The deepest static penetration was approx. 150 mm (Figure 21).

Figure 21. Damage to the Golf

At first sight, no major damage is visible to the C1. Trim parts on the left-hand side are damaged or broken. The left exterior mirror is torn off, the windscreen is cracked. The fact that a considerable energy displacement has taken place is however clearly evident from the rear view of the deformed frame of the C1 (Figure 22).

Figure 22. Damage to the C1

In this case, a reconstruction was not possible due to a lack of information from the police. The collision speeds of the C1 and the Golf were approximately 15 Km/h and 40 Km/h respectively. Both figures are based on witness statements.

The rider of the C1 was wearing his belt, but no helmet. He suffered only whiplash trauma, laceration and contusion of the calf of his left leg and abrasions to his left forearm and hand. Overall, minor injuries AIS 1.

With the exception of the crash element, which due to the accident configuration was unable to influence the outcome, here too the safety elements protected the rider from more serious injuries. The safety cage remained intact and the belt system retained the rider in the frame. The shoulder hoop prevented the rider from coming into contact either with the Golf or with the road surface.

Reconstructions of similar accidents involving conventional two-wheelers show that the rider is usually parted from the machine and makes contact with the bonnet, windscreen and other components.

The two accidents described illustrate the potential trend towards light or minor injuries even in the case of severe collisions. The safety elements have demonstrated their effect and contributed to a positive outcome for the rider. The pattern of damage to the C1 was excellent. As a result of the belt system, the rider remains attached to the vehicle. Uncontrolled movement of the rider and, more importantly, an impact with either his own or the opposing vehicle is prevented. In addiction, the shoulder hoops in association with the belt system have prevented the rider's head from making contact with his outside objects.

CONCLUSION

With the C1 a new class of two wheeled vehicle was conceived with the aim of transferring passive safety measures from the rider's clothing to the vehicle structure and components.

New test methods have been developed (lateral fall) or adapted (roof indentation) and the ISO 13232 motorcycle crash standard have been used to prove the concept during development.

The early positive results of the accident analysis confirm the safety concept. As a result of the restraints, the rider is held inside the protective frame structure. The measures applied to the vehicle have prevented head contact with the striking vehicle or with the road surface.

Nine countries have so far approved the C1 for use without a crash helmet due to its improved level of safety.

Yet, despite the promising results, one should not overlook the fact that there are limits to this development. Even the C1 cannot offer 100% protection against serious or even fatal injuries. The design represents a previously unknown level of safety for a two-wheeler. Nevertheless, the C1 remains a motorised two-wheeled vehicle and its smaller dimensions alone place it at a disadvantage compared with a motor car.

The restraint system is not capable of holding all of the rider's limbs within the passenger cell. In the event of accidents, abrasions can occur even with this concept. Sturdy clothing is to be recommended.

The C1 is in a vehicle category of its own. Its characteristics and its passive safety are not transferable to other two-wheelers. It was not the intention and nor is it possible, to turn every motorcycle into a C1.

It is passive safety which makes the C1 so unique in the world of two-wheeled transport.

REFERENCES

International Standard ISO 13232:1996(E). Motorcycles – Test and analysis procedures for research evaluation of rider crash protective devices fitted to motorcycle, Parts 1 to 8, International Standards Organizations, Geneva, December 1996.