INJURY BIOMECHANICS RESEARCH
Proceedings of the Fourteenth International Workshop

Pneumatic Ballistic Pendulum

Guy S. Nusholtz, P.S. Kaiker, Zheng Lou, and Steven C. Richter

ABSTRACT

Biomechanics impact experiments simulating an automotive, industrial, sports, aviation, or other accident environment require a device capable of delivering a calibrated amount of energy to an instrumented test subject. The University of Michigan Transportation Research Institute (UMTRI) has designed and constructed two such highly specialized impact devices. Blunt impact to the human surrogate is delivered with one of two free-traveling impactors: the pneumatic impact device ("the cannon") and the pneumatic ballistic pendulum. This technical note describes the evolution of these UMTRI impact devices.

The Pneumatic Impact Device - The UMTRI cannon in operation today is a modification and improvement of a design by Richard L. Stalnaker. The cannon is a 2-15 kg mass impactor with a 3-50 m/s velocity range. This pneumatic impact device (Figure 1) consists of an air reservoir, a ground and honed cylinder, and two carefully fitted pistons.

The pressure is regulated by a series of hand valves and measured with a gauge having an accuracy of $\pm$ 0.25%. The driver piston is secured at the reservoir end of the cylinder by an electronically controlled locking mechanism. When the air reservoir is pressurized and the locking mechanism released, the driver piston is propelled by the compressed air along the cylinder until it transfers its energy by impact to the striker piston, which is allowed to travel up to 25 cm. To prevent damage to the two pistons during this energy transfer, elastic bumpers made from Uniroyal Vibrathane were attached to the pistons. Excess kinetic energy is absorbed by a 6.35 cm diameter seamless aluminum (3003 H14) inversion tube with a 0.165 cm wall thickness. Impactor velocity is controlled by reservoir pressure and the ratio of the masses of the driver and striker pistons. The desired impactor stroke can be accurately controlled by the initial positioning of the striker piston with respect to the inversion tube. Both driver and striker pistons can vary in mass from 2-20 kg. The striker piston is fitted with a flat circular plate which can accept various paddings and a force transducer assembly. The impactor force transducer assembly consists of a Kistler 904A piezoelectric accelerometer load washer with a Kistler 804A piezoelectric accelerometer mounted internally for inertial compensation.

The acceleration of the first piston is determined by the pressure in the reservoir (assuming that the expansion is fast enough to be adiabatic) and friction: the Coulomb friction of the cylinder and the velocity-dependent viscous friction. At low velocities, these frictions are not consistent and the velocity of the impact will vary for a given reservoir pressure. Above 5 m/s, velocity is repeatable for a given reservoir pressure, while below 5 m/s velocity can vary as much as 20%. A Finite-difference model of the motion of the two pistons was used to determine the pressure required to produce a desired velocity for given initial test set-up configuration. The finite-difference model accurately reflected the recorded velocities within 5% accuracy for the 6 m/s and above impacts. However, for those below 6 m/s, the model predicted more regularity than the device actually delivers. In addition, the upper limit of repeatable velocities predicted by the model was about 30 m/s.

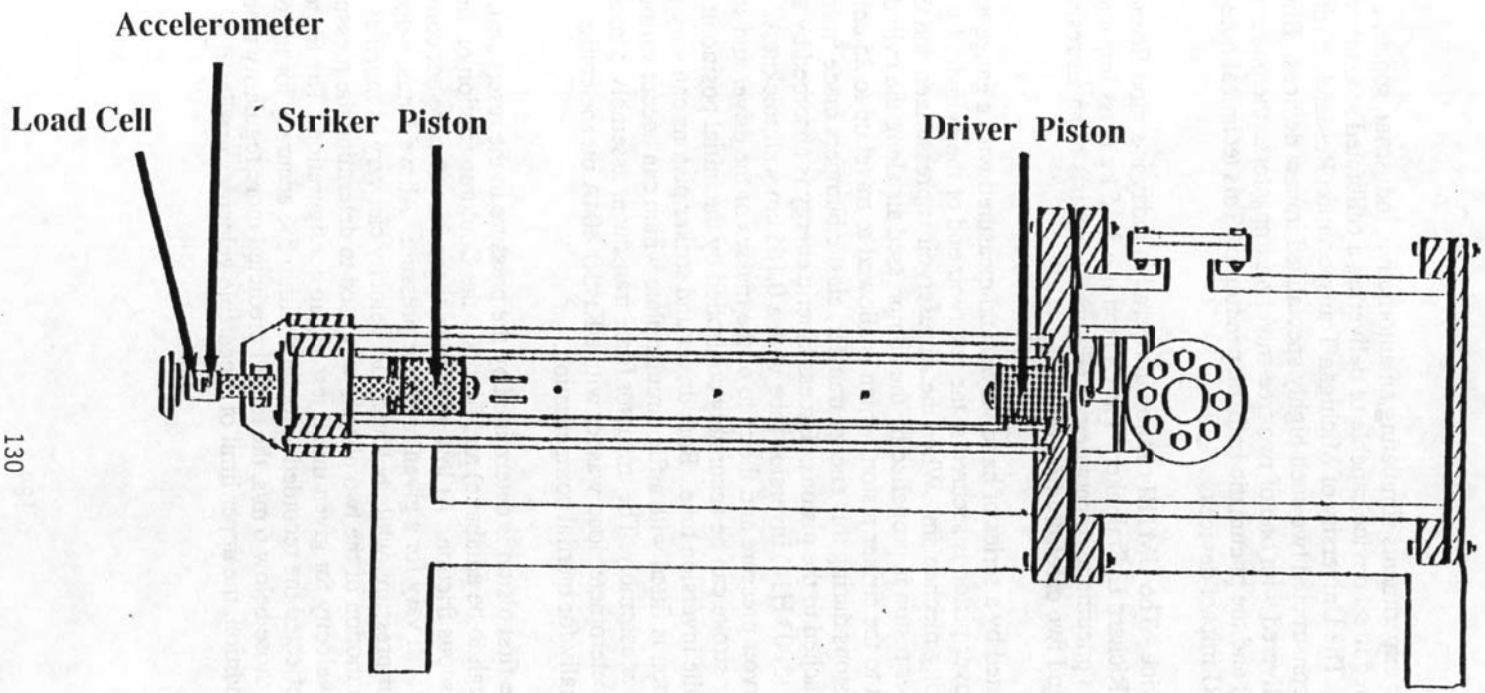

Figure 1. UMTRI Pneumatic Impact Device (Cannon)

The cannon requires very elastic and "stiff" bumpers to ensure that the energy transferred from the driver piston to the striker piston is complete. If this transfer is not complete, a double impact can occur as the first piston (the driver piston) catches up to the second piston (the striker) while it is in contact with the test subject. The very elastic bumpers currently used enable good energy transfer and separation of the pistons, producing a single impact time-history. The cannon load cell is inertially compensated to correct for the weight of the front plate and paddings. Finally, the cannon cannot handle striker masses of greater than 15 kg because of the constraint of its barrel shape.

Pneumatic Ballistic Pendulum - The UMTRI pneumatic ballistic pendulum impact device is a modification of the cannon, consisting of a 10 kg aluminum I-beam, which can accept additional mass up to 200 kg, mechanically coupled to the cannon which serves as the energy source (Figure 2). The reversible modifications include the exchange of the cannon's internal striker piston for an external ballistic I-beam striker and the substitution of the cannon's internal striker and driver pistons with one driver piston (See Figures 1 and 2). The pendulum driver piston has a steel rod running the length of the ground and honed cylinder. This piston-rod is connected to the ballistic pendulum with a nylon cable. Two bearings guide the piston-rod with minimum friction and prevent the rod from bending and binding as a result of the inertial loading of the pendulum. The driver piston-rod is propelled by compressed air from the air reservoir chamber through the cylinder to accelerate the ballistic pendulum, which becomes a free-traveling impactor.

The pneumatic ballistic pendulum impactor can be fitted with several different types of impact surfaces as well as several different masses and mass distributions. However, to minimize off-axis motion of the pendulum, it is desirable to have the pendulum mass as heavy as possible; 70+ kg seems to be a reasonable mass for most impact situations. Striker surfaces used in pendulum impact experiments have included flat plates, simulated automotive bumpers, steering wheels, and the bumper-grill from the front-end of a 1969 Malibu (Figure 3). The pendulum's velocity range is 2-15 m/s.

The major operating problem of the ballistic pendulum is that its speed can exceed the velocities normally obtained through gravitational acceleration. When this occurs, the ballistic pendulum will not necessarily follow the arc dictated by the supporting cables. The correct angle and the lengths of the nylon cables are, therefore, critical to proper operation of the pendulum. If the angle or lengths are inappropriate, the ballistic pendulum will not follow the desired trajectory and may miss the impact target completely. The moment and mass of the piston are used to calculate the angle and lengths of the nylon cables required to keep the cables in positive tension during the pendulum's operation, as well as the mooring positions of the cables with respect to the center of gravity of the piston for each test. In addition, the pressure required to produce the desired velocity for a given test must be determined. A finite-difference model was developed to help determine these setup parameters for any given initial test configuration.

Finite Difference Model - A schematic representation of the pneumatic ballistic pendulum is shown in Figure 4. L_1 through L_8 are constant geometric parameters. L_1 is the distance from the striker to the ceiling between points A-C and B-D respectively. L_2 is the distance between the two suspension string contact points, C and D. L_3 is the distance from the point C to the pendulum center of mass, $m_s g$, in the horizontal direction. L_4 is the vertical distance between the center of mass, $m_s g$, and a line connecting the two points, C and D. L_5 is the vertical distance between the contact point F on the steel rod and the ceiling attachment point, A or B. L_6 is the distance

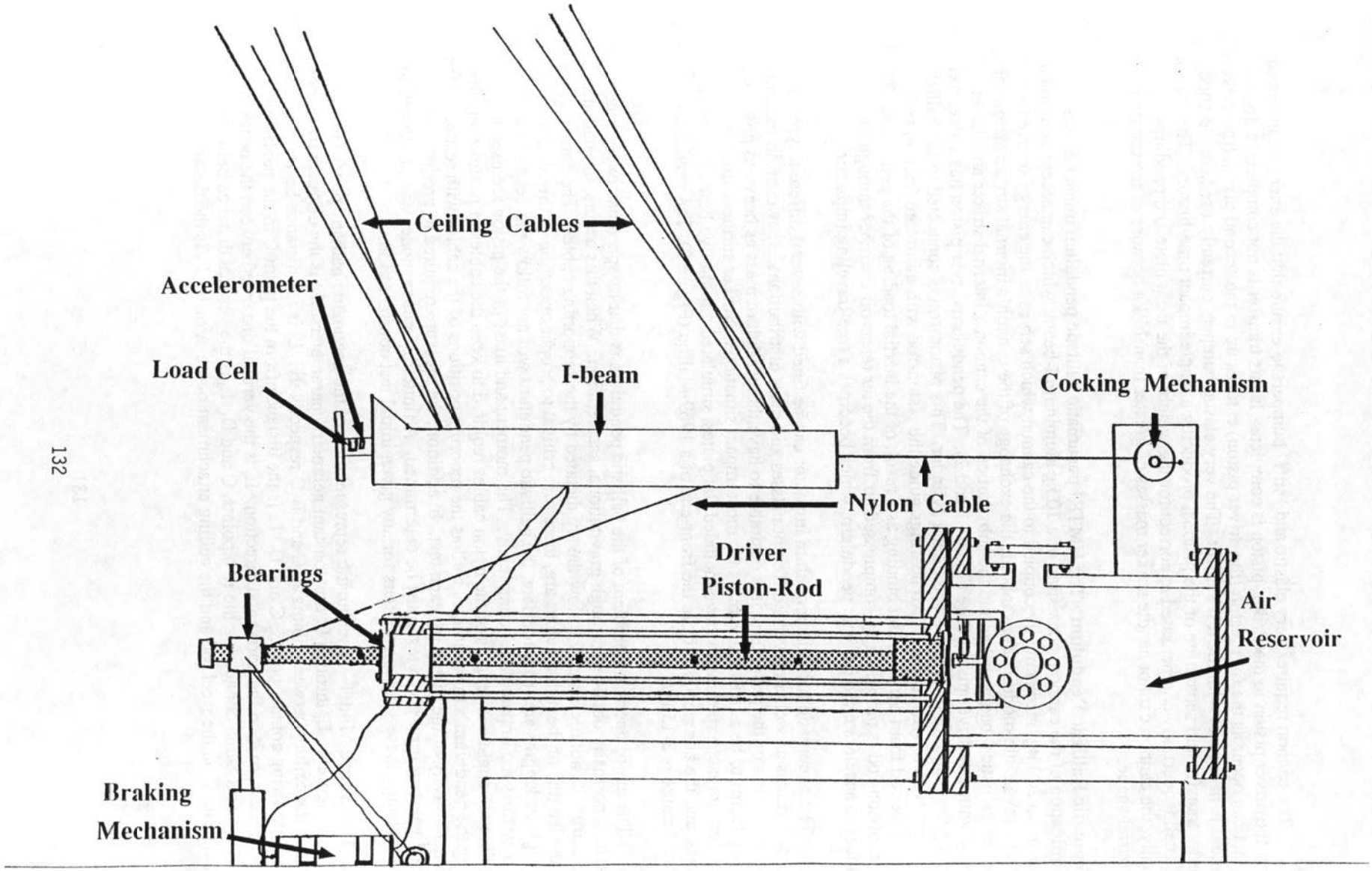

Figure 2. UMTRI Pneumatic Ballistic Pendulum

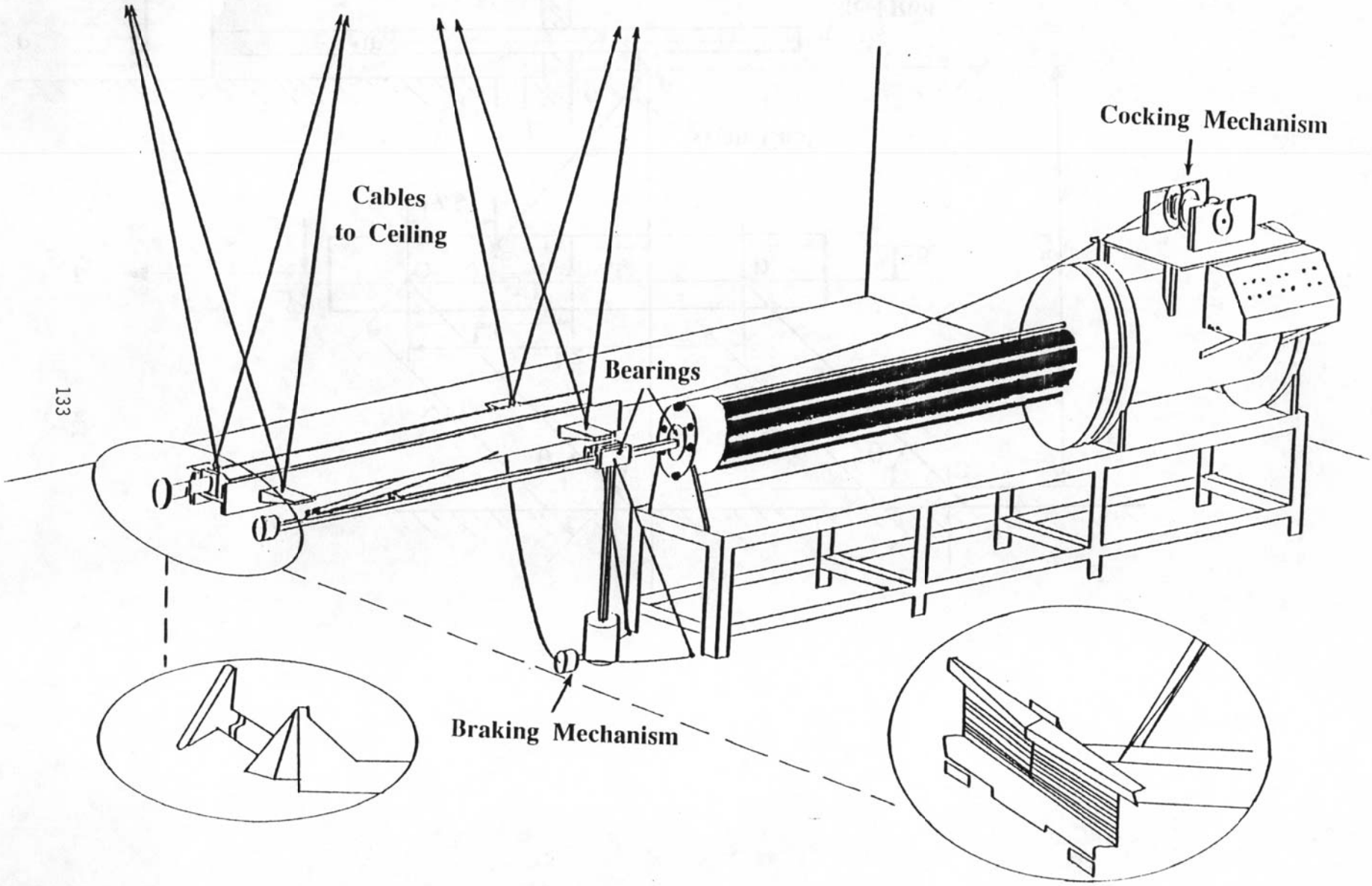

Figure 3. Pneumatic Ballistic Pendulum
Variable Striker Surf...

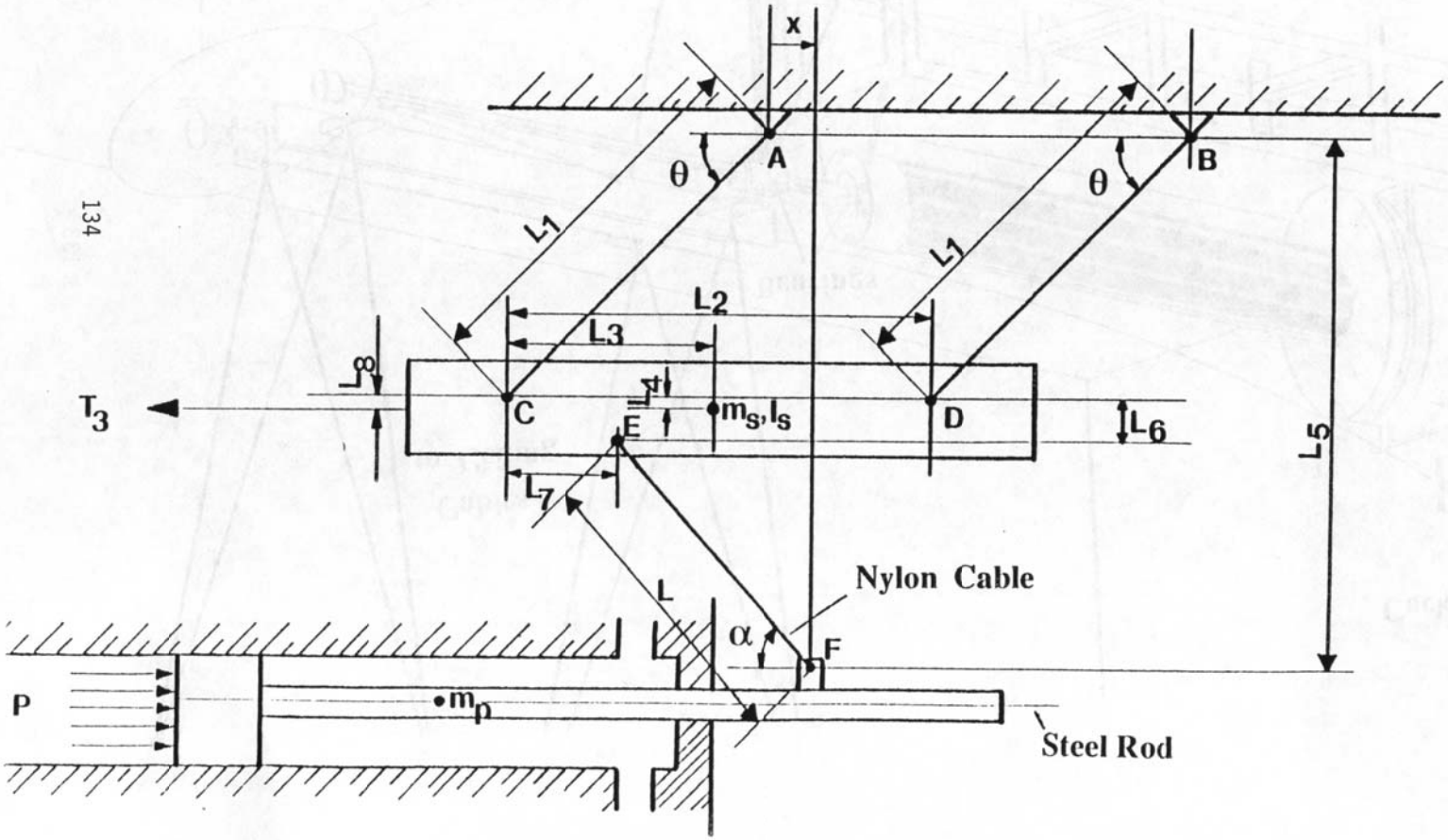

Figure 4. Schematic Representation of the Pneumatic Ballistic Pendulum

between the contact point E and the line between C and D on the striker. L_7 is the distance between the contact points C and E in the horizontal direction. L_8 is equal to L_4, while m_s and m_p are masses for the striker and piston, respectively. I_s is the moment of inertia of the striker with respect to the rotation center of the line A-B. L is the length of the nylon cable (adjustable) which connects the striker with the steel driver piston-rod.

In the numerical simulation, the nylon cable and the steel wires connecting A-C and B-D are assumed to be of constant length. The purpose of the simulation is to find the striker velocity and to insure that all eight cables will be in tension during the pendulum motion from initial position to contact position with the surrogate at the moment of striking.

Governing Equations for the Pneumatic Ballistic Pendulum

Piston - The free body diagram for the cannon driver piston-rod in the cylinder is shown in Figure 5A where T is the tensile force in the nylon cable. As a result of the driver piston contacting the cylinder walls and its accelerated rod contacting the bearings, there are viscous friction forces (f_v's), Coulomb friction forces (f_c's), torques (M's), and normal forces (N's). With a known T, we cannot find N_1, N_2, M_1, or M_2 from the force-balance equation in vertical direction and the moment equation. Thus, it is an indeterminate problem. In addition, N_1, N_2, M_1, and M_2 are only used for the calculation of the Coulomb frictional force. Therefore, estimating the total Coulomb friction force (f_c) we use:

$$f_c = f_{c1} + f_{c2} = C_c \cdot \sin(\alpha) \cdot T \qquad (1)$$

where C_c is a constant, f_{c1} is the Coulomb force for the bearing, and f_{c2} is the Coulomb force for the piston.

Similarly, due to the difficulty in evaluating the contact area and lubrication conditions, the following simple form is assumed for viscous friction:

$$f_v = f_{v1} + f_{v2} = C_v \cdot \dot{x} \qquad (2)$$

where f_{v1} is the viscous force for the bearing, f_{v2} is the viscous force for the piston, and $\dot{x}$ is the horizontal velocity. Approximate values of C_c and C_v have been obtained by experimental testing.

The air in the cylinder is assumed to be an ideal gas and the expansion associated with the driver piston-rod acceleration is assumed to be an adiabatic reversible process. Then the pressure inside the cylinder is:

$$P = P_o/[1 + A(x - x_o)/V_o]^k \qquad (3)$$

where P_o is the initial pressure, A is the cross-sectional area of the piston, x_o is the initial translational displacement, V_o is the initial air volume, and k is the specific heat ratio of the air. The back pressure on the driver piston-rod is roughly equal to the atmospheric pressure P_{atm}.

The equation of motion for the driver piston-rod is:

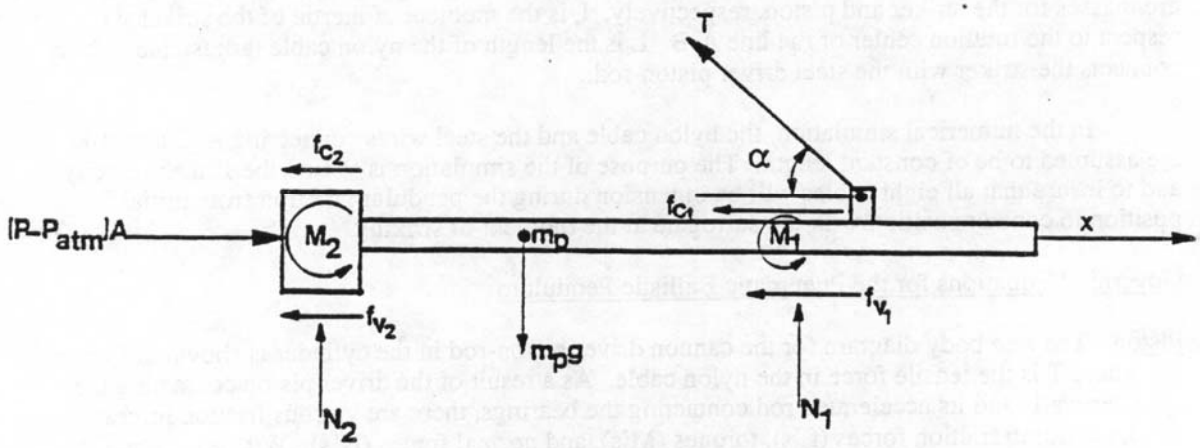

Figure 5a. The Free-Body Diagram for the Driver Piston-Rod

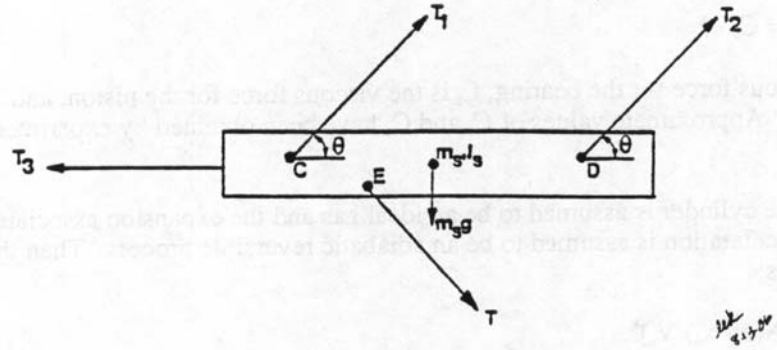

Figure 5b. The Free-Body Diagram for the Ballistic Pendulum

$$m_p \cdot \ddot{x} + C_v \cdot x - A(P - P_{atm}) + (C_c \cdot \sin(\alpha) + \cos(\alpha))\, T = 0 \qquad (4)$$

This equation can be used to predict the position, velocity, and acceleration of the piston-rod and indirectly, the position, velocity, and acceleration of the ballistic pendulum at each instant in time.

Striker - Figure 5B is the free body diagram for the ballistic pendulum striker where T_1 and T_2 are the tensions in the strings A-C and B-D, respectively. T_3 is the tension from the holding string and is negligible. If there is no rotation about point C, then:

$$L_2 \cdot \sin(\theta) \cdot T_2 - L_3 \cdot m_s \cdot g + (L_6 \cos(\alpha) - L_7 \cdot \sin(\alpha)) \cdot T = 0 \qquad (5)$$

If there is no rotation about point D, then:

$$-L_2 \cdot T_1 \cdot \sin(\theta) + (L_2 - L_3) \cdot m_s \cdot g + [L_6 \cos(\alpha) - (L_2 - L_7) \cdot \sin(\alpha)] \cdot T = 0 \qquad (6)$$

The equation of motion is:

$$T \cdot \cos(\alpha) \cdot (L_1 \cdot \sin(\theta) + L_6) + (T \cdot \sin(\alpha) + m_s \cdot g) \cdot L_1 \cdot \cos(\theta) = I_s \cdot \theta \qquad (7)$$

The system is of one degree of freedom such that θ, α, and x are related by these two equations:

$$L_1 \cdot \cos(\theta) + x = L_7 + L \cdot \cos(\alpha) \qquad (8)$$

$$L_1 \cdot \sin(\theta) + L_6 + L \cdot \sin(\alpha) = L_5 \qquad (9)$$

Finally, there are seven unknowns: θ, α, x, P, T, T_1, and T_2 and seven equations (numbers 3-9) which were used to create a finite-difference model of the pendulum's operation. The purpose of the simulation was to find the striker velocity and to insure that all eight cables would be in tension during the pendulum motion from initial position to contact position with the surrogate at the moment of striking. The model predicted the angles and cable lengths required as well as the reservoir pressure required to produce the desired velocity.

Results of the Numerical Simulations - With the initial cannon cylinder pressure ranging from 5.0 to 100.0 psig, the striker velocity changes from 3.4 to 16.2 m/s. The errors of the simulation were, generally, within 5% of the experimental results.

Acknowledgements

The authors wish to acknowledge Richard L. Stalnaker and John W. Melvin for their roles in the development of these impact devices. The authors are also grateful to the following people for their technical assistance in the preparation of this paper: Larry Schneider, Peter Schuetz, Bryan Suggitt, Lillian Kim, Colleen Jones, Valerie A. Karime, and Carol Sobecki. Modifications to the impact devices were partially funded by the Department of Transportation National Highway Traffic Safety Administration, Contract No. DTNH83-C-17019. Many thanks to Jeffrey Marcus for his encouragement and thoughtful review of this technical note.