# 4

# ADVANCES IN MAGNETOHYDRODYNAMIC ANGULAR RATE SENSORS (MHD ARS) FOR CRASH TESTING

Mark A. Hawes
Darren R. Laughlin
Applied Technology Associates

Submitted to the 21st Annual International Workshop on
Human Subjects for Biomechanical Research
Wednesday, November 10, 1993

*Paper was presented at the 21st Annual Workshop on Human Subjects for Biomechanical Research. This paper has not been screened for accuracy nor refereed by any body of scientific peers and should not be referenced in the open literature.*

## ABSTRACT

Applied Technology Associates (ATA) developed the original Magnetohydrodynamic Angular Rate Sensor (MHD ARS) for the National Highway Traffic Safety Administration (NHTSA) 5 years ago. Its purpose was to determine the angular acceleration of Hybrid III Anthropomorphic Test Devices or "crash dummy" heads. Since then, ATA's sensors have been used in a variety of crash tests and extended to other automotive applications involving airbags and vehicle rollovers. The sensors have been used to determine angular velocity, position, and acceleration. ATA has developed a new MHD sensor, the ARS-01, to replace the older MHD AMS IETL-001. The ARS-01 is more sensitive and has greater resolution, with an order of magnitude higher scale factor (60 versus 5 mV/rad/s) and an order of magnitude lower noise floor (3e-8 versus 4e-7 $(rad/s)^2/Hz$) than the older model. Better resolution enables greater accuracy in both differentiating the output signal to obtain angular acceleration and also in compensating and integrating the velocity signal into angular displacement. ATA has also developed a smaller model sensor: the MHD ARS-04. With equivalent specifications to the older IETL-001, but with a size that enables three sensors to fit into a 1" cube, the ARS-04 offers exciting possibilities for the automotive crash testing community for angular velocity and position measurements.

## BACKGROUND

In 1989, ATA introduced the IETL-001 for anthropomorphic test device instrumentation at the 33rd Stapp Car Crash Conference (Ref. 1). The development of the IETL-001 was funded by NHTSA under the auspices of a Phase I and Phase II Small Business Innovation Research Program (Ref. 2). The IETL-001 prototypes were the first MHD angular rate sensors specifically designed for crash testing. The IETL was designed to measure angular accelerations up to 50,000 $rad/s^2$ in 350 g environments with a maximum linear acceleration sensitivity of 1 $rad/s^2$ per g. The first IETLs featured a #10-32 mounting stud as part of the base and weighed 35 grams. A second version of the IETL was also built. It had a thicker base with a #10-32 mounting hole and weighed approximately 46 grams. For the most part, the IETLs worked adequately and have been evaluated at the Naval Biodynamics Research Laboratory (Refs. 3, 4). However, some shortcomings of the IETL did exist. These deficiencies have been overcome with an upgraded version of the IETL designated as the ARS-01. This relatively new MHD angular rate sensor has significantly better performance than the IETL.

In addition to the ARS-01, the newest MHD sensor applicable to crash testing is the ARS-04. Lower in cost than the ARS-01, the ARS-04 is a very small (0.4" in diameter x 0.3" in height) angular rate sensor designed for applications not requiring the resolution of the ARS-01. The ARS-04E is the ARS-04 with amplification electronics added, which yields measurement performance comparable to the older IETL. Figure 1 is a photograph of the original IETL-001 and its successors. Figure 2 is a simplified full scale drawing of each of the sensors shown in Figure 1.

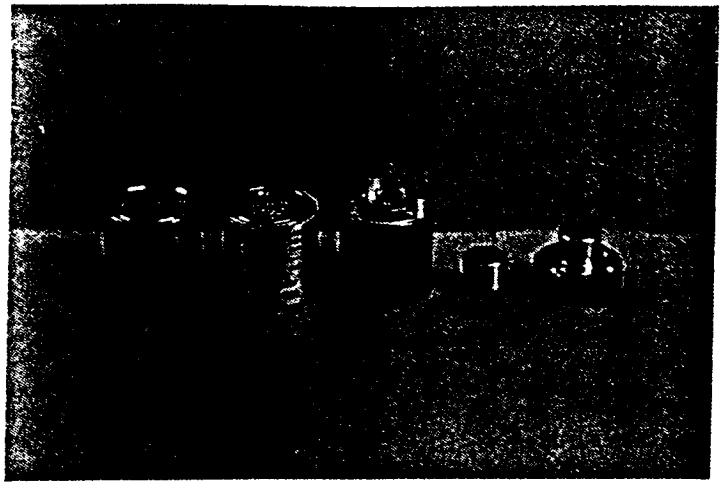

**Figure 1. ATA's Family of MHD Angular Rate Sensors for Crash Testing. From left to right, original IETL-001 with #10-32 integral stud, IETL-001 with #10-32 mounting hole, ARS-01, ARS-04, and ARS-04E.**

## ARS-01 UPGRADES FOR IETL-001 SHORTCOMINGS

The original IETL-001 had a mounting stud directly machined into the case (see Figures 1 and 2) and weighed only 35 grams; it was replaced with the slightly heavier (11 grams greater) IETL-001 with a #10-32 mounting hole (Figures 1 and 2). The integral stud version made it difficult to provide case isolation, which was needed in many testing scenarios. If the potential at the sensor mount differed from the data acquisition common potential, a ground loop would occur causing unacceptable measurement errors due to differential ground current flow through the signal return. The #10-32 mounting hole version of the IETL could be ground isolated by simply using an off-the-shelf isolation stud. With the exception of 11 grams additional weight, the mounting hole version of the IETL provided a significantly more accurate solution.

Although ground-loop related problems were removed with the second version of the IETL, some improvements were also needed in the in-situ thick film hybrid electronics. The IETL, both stud and mounting hole types, incorporated a low noise instrumentation amplifier, which was hard wired for a gain of 1,000 V/V to amplify the raw channel voltage to an output rate sensitivity of 6 mV/rad/s, or about 0.1 mV/deg/s. For data acquisition systems (DASs) without any additional front-end gain, and with 12-bit analog-to-digital converters over a ±10V range, each bit was equivalent to 5 mV, or approximately 1 rad/s equivalent rate. Although a 1 rad/s per bit resolution was adequate for impacts that generated rates in excess of tens or hundreds of radians/second, it was not suitable for tests requiring rate measurements of a few radians per second or less. Even though DASs with programmable amplifiers increase the rate resolution per bit, additional gain alone could not correct the whole problem due to the inherent output offset of the IETL-001. For instance, if the IETL output signal was amplified by an additional gain of 10 or 100 V/V, the output offset of the IETL-001, which could be as high as ±50 mV, would also be increased to ±0.5V or ±5V, respectively. Offset removal could only be accomplished with an in-line high pass filter, but most DASs did not have this capability. In addition, the high pass filter response needed to be known precisely and compensated for if lower frequency (<5 Hz) angular motions were of interest. Overall, the combination of low gain and high output offset emphatically reduced the effective dynamic range of the IETL, thereby limiting its usefulness for many applications. The ARS-01 overcomes these problems with much improved hybrid electronics.

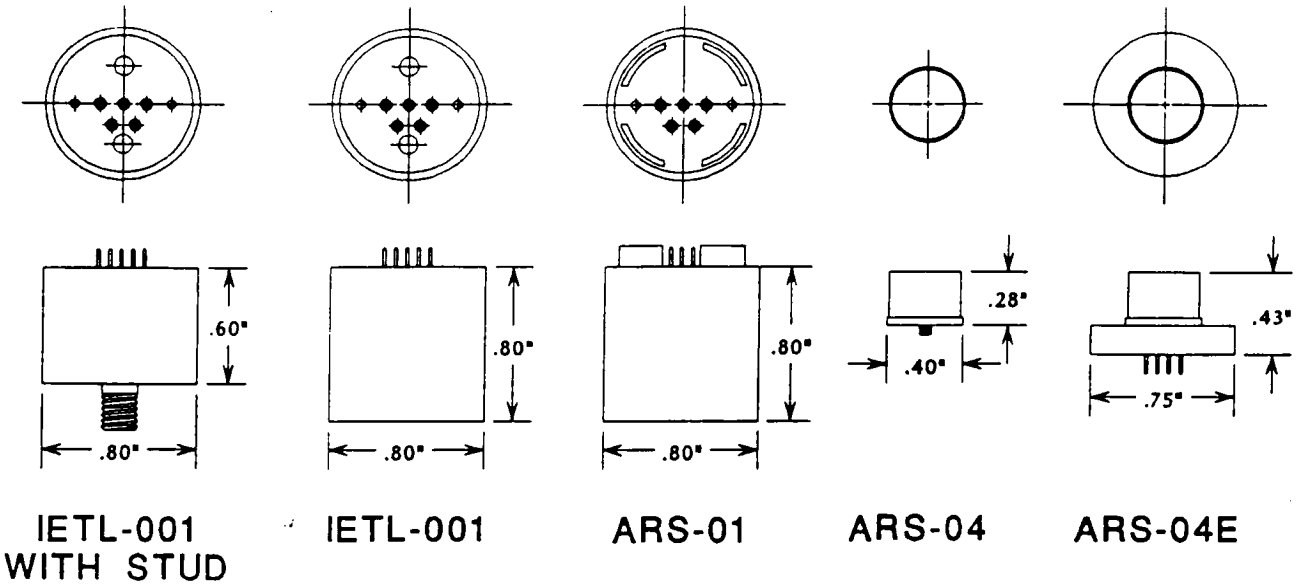


**Figure 2. Full-scale Drawing of MHD ARS Sensors. From left to right, the original IETL-001 with integral stud, IETL-001 with mounting hole, ARS-01, ARS-04, and ARS-04E.**

The in-situ ARS-01 hybrid electronics provide a gain of 10,000 V/V increasing the rate sensitivity from 5-6 mV/rad/s to 50-60 mV/rad/s while simultaneously decreasing the typical output offset to less than ± 20 mV. The ARS-01 makes it possible to collect quality data with unity gain, 12 bit over ± 10 Vdc range DASs, with each bit now equal to 0.1 rad/s. With an additional gain of 10 in front of the DAS (or a reduced digitization range of ±1 Vdc), each bit is now equal to 0.01 rad/s, or about 0.6 deg/s with the worst case offset of 200 mV. Even with the increased gain over the IETL, the ARS-01 has a dynamic range in excess of ±200 rad/s based on a ±15 Vdc power supply with an output voltage of ±10 Vdc. A range of ±200 rad/s (±12,000 deg/s) is adequate for virtually all crash test applications.

Higher gain and lower offset were not the only advantages of the new hybrid electronics. Improvements in resolution were also made. The fundamental resolution of both the ARS-01 and the IETL-001 are ultimately limited by the noise of the amplification electronics. The original IETL-001 electronics, which were the state-of-the-art at the time, exhibited about a $1 \times 10^{-17}$ $V^2/Hz$ voltage noise power spectral density (PSD) referenced to the input (RTI) with a 1/f noise break frequency of approximately 10 Hz. The new ARS-01 electronics take advantage of much quieter bipolar linear amplifier electronics that exhibit a voltage noise PSD RTI better than $9 \times 10^{-19}$ $V^2/Hz$ broadband level with a typical 1/f noise corner of 7 Hz. Taking into account the unamplified scale factors of either the IETL-001 or the ARS-01 at 6 μV/rad/s, the equivalent angular velocity noise PSD for the IETL was $4 \times 10^{-7}$ $V^2/Hz$, and $3 \times 10^{-8}$ $V^2/Hz$ for the ARS-01. The ARS-01 electronics are 11 times quieter (3.5 times in amplitude) in voltage noise than the IETL electronics. By the same argument, since the rate resolution of the ARS-01 is 3.5 times better than the IETL-001, the ARS-01 will significantly outperform the IETL-001 in virtually all measurement scenarios.

Another attribute of the ARS-01 electronics is that the upper cutoff filter is second order instead of first order as in IETL-001. This is beneficial since it minimizes aliasing caused by high

frequency noise near the Nyquist frequency of the DAS. Also the dynamic output impedance of the ARS-01 is typically less than 100Ω whereas the IETL-001 was 2 kΩ. A low output impedance transducer is less susceptible to error associated with the input impedance of the DASs. For instance, if the input impedance to the DAS was 50 kΩ, the effective sensitivity as measured by the DAS is reduced by the ratio of 2,000/(50,000+2,000), or 3.8% as compared to 100/(50,000 +100) or 0.2%. However, in the majority of testing scenarios this is not a problem since most DASs have input impedances greater than 100 kΩ.

### Header/Connector Improvements

One of the problems that arose from use of the IETL-001 was the difficulty in aligning and seating the connector onto the five pins extruding from the header. Similarly, removing the connector without damaging the pins was also difficult. A design modification was made to the connector and the sensor header to alleviate both of these problems. The ARS-01 has a castle top (see Figures 1 and 2) that serves a dual role. First, it acts as a connector alignment keyway and second it protects the pins from shearing or bending as the connector is removed or side loaded during impacts. This unique design also allows for easier removal of the connector when compared to the old cylindrical design that was somewhat difficult to remove without damaging the pins. The castle top is also designed to be 0.010" taller than the pins so that the top actually prevents damage to the pins if the sensor is inadvertently dropped.

## ARS-04 SENSOR TRIAXIAL CUBE

The constant trend in sensor development is to minimize the weight and the overall envelope of any particular transducer while still maintaining adequate performance for a specific application. The latest MHD sensor that is expected to have extensive use in safety testing is the ARS-04. Referring to Figures 1 and 2, the ARS-04 and ARS-04E are considerably smaller than the IETL-001 and the ARS-01. The ARS-04 is 0.4" in diameter by 0.28" in height and weighs a mere 3.6 grams. It is approximately one thirteenth of the weight and one eleventh of the volume of an ARS-01. The ARS-04 differs from the ARS-01 in that it does not incorporate integrated electronics. The unamplified scale factor of the ARS-04 is about 1 μV/rad/s (as compared to 5-6 μV/rad/s for the ARS-01 or IETL-001) and low noise amplification will be required for most applications. The ARS-04E is the ARS-04 sensor with virtually the same low noise electronics used in the ARS-01, with pins so that it can be connected to a standard ARS-01 connector. The amplification is nominally set to 100,000 V/V yielding 100 mV/rad/s rate sensitivity; however, the gain can be reduced for applications requiring lower sensitivity.

Another sensor option that is available is a 1.25" cube (90 grams) with three orthogonally mounted ARS-04Es (Figure 3). The triaxial ARS-04 package will allow measurement scenarios not possible with the ARS-01 because it is small, lighter, and costs about the same as a single ARS-01.

**Figure 3. ARS-04 Cube with Three Orthogonally Mounted ARS-04Es**

## SENSOR PERFORMANCE COMPARISON

Table 1 compares the performance of the IETL-001, ARS-01, and ARS-04E; Figure 4 shows their equivalent angular rate noise PSDs; and Figure 5 shows the typical frequency response functions. For further quantitative comparison, Table 2 shows the equivalent (RMS) (1 sigma) angular displacement, angular velocity, and angular acceleration noise figures for integration bandwidths of 1-10, 10-100, and 100-1000 Hz, plus a cumulative root sum of squares noise figure for the 1-1,000 Hz bandwidth for the IETL-001, ARS-01, and the ARS-04E, respectively.

**Table 1. Performance Comparison of the IETL-001, ARS-01, and ARS-04E**

| | IETL-001 | ARS-01 | ARS-04E | Units |
|---|---|---|---|---|
| Sensitivity | 6 | 60 | 100 | mV/rad/s |
| Bandwidth | 0.5-2500 | 0.3-1000+ | 0.5-1000+ | hertz |
| Range | ±1600 | ±200 | ±100 | rad/s |
| Diameter | 0.80 | 0.80 | 0.40 | inches |
| Height | 0.8 | 0.8 | 0.6 | inches |
| Weight | 46 | 46 | 6 | grams |

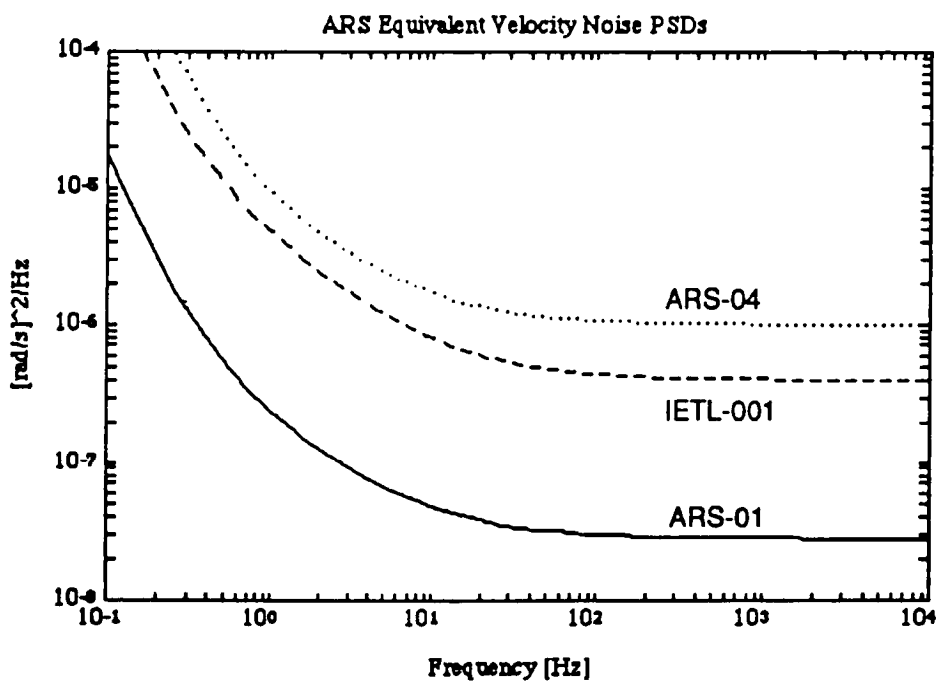


**Figure 4. Equivalent Angular Rate Noise PSDs of the IETL-001, ARS-01, and ARS-04E**

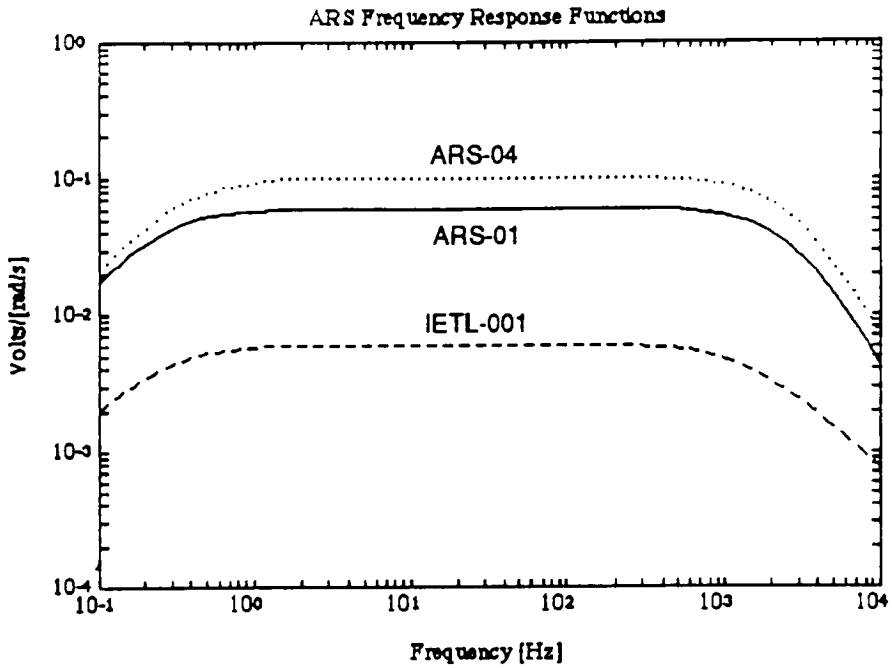


**Figure 5.** **Typical Magnitude Frequency Responses for the IETL-001, ARS-01, and ARS-04E**

**Table 2.** **Equivalent Noise Comparisons for Angular Displacement, Angular Velocity, and Angular Acceleration**

| Integration Bandwidth | 1- 10 (Hz) | 10-100 (Hz) | 100-1000 (Hz) | 1-1000 (Hz) | Units |
|---|---|---|---|---|---|
| Angular Displacement Noise | | | | | |
| IETL-001 | 244.2 | 37.6 | 9.8 | 247.3 | μrad RMS |
| ARS-01 | 52.8 | 8.9 | 2.4 | 53.6 | μrad RMS |
| ARS-04 | 316.8 | 53.3 | 14.6 | 321.6 | μrad RMS |
| | | | | 20.7 | |
| Angular Velocity Noise | | | | | |
| IETL-001 | 3.6 | 6.7 | 19.2 | 20.7 | mrad/s RMS |
| ARS-01 | 0.8 | 1.6 | 4.8 | 5.1 | mrad/s RMS |
| ARS-04 | 4.8 | 9.8 | 28.7 | 30.7 | mrad/s RMS |
| | | | | | |
| Angular Acceleration Noise | | | | | |
| IETL-001 | 0.11 | 2.46 | 73.1 | 73.1 | rad/s$^2$ RMS |
| ARS-01 | 0.03 | 0.60 | 18.2 | 18.2 | rad/s$^2$ RMS |
| ARS-04 | 0.16 | 3.61 | 109.3 | 109.4 | rad/s$^2$ RMS |

One interesting observation is that the ARS-04E has only 1.5 times worse resolution when compared to the IETL-001. Even though the unamplified gain of the ARS-04 is approximately one fifth of the raw rate sensitivity of the IETL-001, the new electronics are 3.3 times quieter than the IETL-001 electronics, which yield the 1.5 times noise performance difference.

## ADDITIONAL ARS-01 AND ARS-04 CHARACTERIZATION

Because of the increased interest in integrating the ARS-01 velocity signal to yield angular displacement, new test equipment is being developed to more fully characterize the time domain characteristics of rotational shocks. A pendulum tester, illustrated in Figure 6, is currently being designed and will be fabricated in the near future to better characterize MHD sensors. With this custom designed test fixture, it will be possible to verify the ARS-01 and ARS-04 low frequency compensation and integration coefficients and procedures to calculate accurate angular displacement. The low corner frequency determined by the MHD channel dynamics, and also the high pass filter characteristics of the amplifier electronics, can be measured with frequency response tests. The corner frequencies can then be used in the low frequency compensation/integration digital filter (Ref. 5) to process the ARS-01 signal time history so that the dynamic angular displacement of the pendulum may be calculated. The pendulum tester will also incorporate a linear accelerometer mounted at the back of the impact area (refer to Figure 6) to measure the actual translational acceleration imparted to the MHD sensors, which are mounted on the rigid pendulum. The sensitive axes of the sensors are aligned with the axis of rotation of the pendulum.

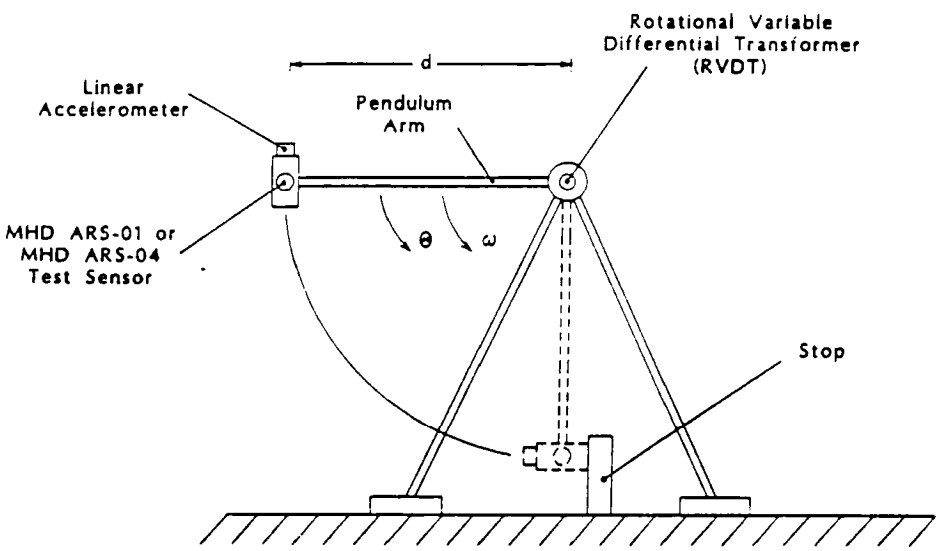


**Figure 6. MHD Sensor Pendulum Test Fixture**

A rotational variable differential transformer (RVDT) will also be used to measure the relative angular displacement of the pendulum. The RVDT provides the precision reference for comparison with the calculated angle versus time result derived from the ARS-01 sensor signals.

As the pendulum strikes the stop at the bottom of its swing, the sharp impact creates very high angular accelerations that can be correlated to the translational acceleration measured by the linear accelerometer affixed to the back of the pendulum. It is feasible to differentiate the angular velocity signal of the ARS-01 to yield the angular acceleration of the pendulum and compare it to the acceleration profile as measured by the linear accelerometer. The angular acceleration of the

pendulum, assuming rigid body motion, is equivalent to the linear acceleration of the pendulum, where the accelerometer is mounted, divided by the distance from the center of rotation to the sensitive axis of the accelerometer. The impact profile as the pendulum is stopped can be varied by using different materials in the impact area with different coefficients of restitution. For example, a thick rubber stop will generate a much lower amplitude and frequency pulse than metal impacting metal, which is the other extreme exhibiting very high amplitude and high frequency shocks.

## SUMMARY

The numerous advantages of the ARS-01 over the IETL-001, and the fact that the ARS-04 has very close measurement performance as compared to the IETL-001, has resulted in obsolescence of the IETL-001. The ARS-01 is designed for improved angular shock measurement accuracy in all domains (angle, rate, and acceleration). The potential for the smaller and lighter ARS-04 MHD sensor in vehicle safety testing is very good, especially for angular rate and angular displacement measurement applications. In-house pendulum testing of the various MHD sensors will verify essential parameters used in precise angular displacement calculations based on the low frequency compensation and integration. The pendulum tester also provides additional characterization of the angular acceleration derivations. In conclusion, the ARS-01 and ARS-04 sensors open up many measurement opportunities in safety testing, which were not possible until now because of the lack of a suitable angular motion sensor.

## REFERENCES


1. Laughlin, D. R., "A Magnetohydrodynamic Angular Motion Sensor for Anthropomorphic Test Device Instrumentation," Proceedings of the 33rd Stapp Conference, Society of Automotive Engineers, Washington, DC, October 1992.

2. Laughlin, D. R., "Final Report for the Phase II Development of an Angular Accelerometer," Contract No. DTRS-57-88-C-0015, Applied Technology Associates, Inc., ATA Report No, 89R0106, Albuquerque, NM, December 20, 1989.

3. Laughlin, D.R., "Development of an Angular Accelerometer, IETL-001 Testing at the Naval Biodynamics Laboratory", ATA Memo SBIR-062, April 1989.

4. Willems, G.C., "A Detailed Evaluation of the ATA Angular Motion Sensor in Realistic Simulated Crash Environments," Proceedings of the 35th Stapp Conference, Society of Automotive Engineers, Orlando, FL, October 1992.

5. Laughlin, D.R., "An Innovative Sensor for Inertial Attitude Measurement Using the Magnetohydrodynamic Principle," Proceedings of the National Technical Meeting, The Institute of Navigation, San Diego, CA, January 27-29, 1992, pp.269-299.

DISCUSSION

PAPER: **Advances in Magnetohydrodynamic Angular Rate Sensors (MHD ARS) for Crash Testing**

SPEAKER: Mark A. Hawes, Applied Technology Associates

QUESTION: Richard Morgan, NHTSA

You say the lowest price is for the AROS04. What does lowest price mean? Could you give us an idea?

A: Typically, the AROS01's list price for about $2,400.00. The O4's list for about $500.00, so if you are talking about a cube with the MHD's in them, I'd say they would roughly be the same price as one AROS01. That doesn't include the linear accelerometers, but there would be provisions to mount those on there.